Comparative Metabolomics of Bufalin-Treated Cells: A Guide for Researchers

Author: BenchChem Technical Support Team. **Date**: April 2026

Compound of Interest

Compound Name:	*Bufol*
CAS No.:	*16991-60-9*
Cat. No.:	*B098413*

Get Quote

For researchers, scientists, and drug development professionals, this guide provides an objective comparison of the metabolic effects of Bufalin on cancer cells against the widely-used chemotherapeutic agent, Doxorubicin. The information presented is supported by experimental data from publicly available research.

Bufalin, a cardiotonic steroid originally isolated from toad venom, has demonstrated significant anti-cancer properties. Its mechanism of action involves the modulation of various cellular signaling pathways, leading to apoptosis and inhibition of cell proliferation. Understanding the metabolic reprogramming induced by Bufalin is crucial for elucidating its therapeutic effects and identifying potential biomarkers. This guide offers a comparative analysis of the metabolomic changes in cancer cells treated with Bufalin versus Doxorubicin, a standard-of-care anthracycline chemotherapy drug.

Comparative Analysis of Metabolic Alterations

While direct head-to-head metabolomics studies are limited, a comparative analysis based on existing literature reveals distinct and overlapping metabolic signatures for Bufalin and

© 2026 BenchChem. All rights reserved.

Doxorubicin. The following tables summarize the key metabolic pathways and altered metabolites observed in cancer cells upon treatment with each compound.

Table 1: Key Metabolic Pathways Affected by Bufalin and Doxorubicin

Metabolic Pathway	Bufalin	Doxorubicin
Amino Acid Metabolism	Modulated[1][2][3]	Altered[4]
Energy Metabolism	Modulated[1][2][5][3]	Inhibition of Glycolysis and TCA Cycle[4][6]
Lipid Metabolism	Modulated[1][2][5][3]	Altered
Methionine Metabolism	Modulated[1][2][5][3]	-
Nucleotide Synthesis	-	Suppressed[6]
Glutathione Metabolism	-	Perturbed
Arginine and Proline Metabolism	-	Perturbed
Beta-Alanine Metabolism	-	Perturbed

Table 2: Comparison of Altered Metabolites in Cancer Cells

© 2026 BenchChem. All rights reserved.

Metabolite	Change with Bufalin Treatment	Change with Doxorubicin Treatment
Glucose	-	Increased (suggesting inhibition of glycolysis)[4][6]
Lactate	-	Decreased[6]
Acetate	-	Increased[4]
Glutamate	-	Increased[4]
Glutamine	-	Increased[4]
Alanine	-	Decreased[4]
Choline	-	Decreased[4]
Taurine	-	Decreased[4]
Inosine	-	Decreased[4]
Lysine	-	Decreased[4]
Phenylalanine	-	Decreased[4]
Valine	-	Increased[4]
Methionine	Modulated[1][2][5][3]	Increased[4]
Isoleucine	-	Increased[4]
sn-glycero-3-phosphocholine	-	Increased[4]
Fumarate	-	Decreased[4]
o-phosphocholine	-	Decreased[4]

Experimental Protocols

The following section details a generalized methodology for a comparative metabolomics study of Bufalin-treated cells, based on common practices in the field.

Cell Culture and Treatment

© 2026 BenchChem. All rights reserved.

- Cell Line Selection: Human cancer cell lines, such as HepG2 (hepatocellular carcinoma) or A549 (lung cancer), are commonly used.
- Culture Conditions: Cells are cultured in a suitable medium (e.g., DMEM) supplemented with fetal bovine serum (FBS) and antibiotics, and maintained in a humidified incubator at 37°C with 5% CO2.
- Treatment: Cells are seeded in culture plates and allowed to adhere overnight. The following day, the medium is replaced with fresh medium containing either Bufalin (at a predetermined IC50 concentration), Doxorubicin (as a positive control), or a vehicle control (e.g., DMSO). Cells are then incubated for a specific duration (e.g., 24 or 48 hours).

Metabolite Extraction

- Quenching: To halt metabolic activity, the culture medium is rapidly removed, and the cells are washed with ice-cold phosphate-buffered saline (PBS).
- Extraction: Metabolites are extracted by adding a pre-chilled solvent mixture, typically methanol/acetonitrile/water (2:2:1, v/v/v), to the cell monolayer.
- Harvesting: The cells are scraped, and the cell lysate is transferred to a microcentrifuge tube.
- Centrifugation: The lysate is centrifuged at high speed to pellet proteins and cellular debris.
- Supernatant Collection: The supernatant containing the extracted metabolites is carefully collected for analysis.

Untargeted Metabolomics Analysis using LC-MS

- Chromatographic Separation: The metabolite extract is injected into an ultra-high-performance liquid chromatography (UHPLC) system coupled to a high-resolution mass spectrometer (HRMS), such as a Q-TOF or Orbitrap. A reversed-phase C18 column is commonly used for separation.
- Mass Spectrometry: The mass spectrometer is operated in both positive and negative ionization modes to detect a wide range of metabolites.

© 2026 BenchChem. All rights reserved.

- Data Acquisition: Data is acquired in a data-dependent or data-independent manner to obtain MS1 and MS/MS spectra for metabolite identification.
- Data Processing and Analysis: The raw data is processed using specialized software to perform peak picking, alignment, and normalization. Statistical analysis (e.g., t-test, ANOVA, PCA, OPLS-DA) is then used to identify significantly altered metabolites between the different treatment groups.
- Metabolite Identification: Putative metabolite identification is performed by matching the accurate mass, retention time, and MS/MS fragmentation patterns to online databases (e.g., METLIN, HMDB) and in-house libraries.

Visualizations

Bufalin-Modulated Signaling Pathways

Bufalin exerts its anti-cancer effects by modulating several key signaling pathways that are often dysregulated in cancer. The diagram below illustrates a simplified overview of these interactions.

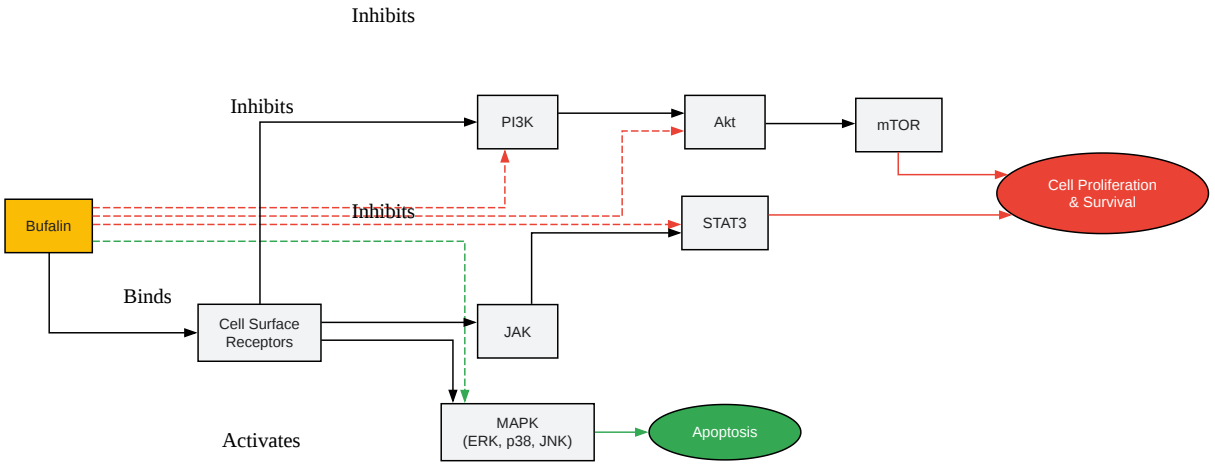

© 2026 BenchChem. All rights reserved.

Click to download full resolution via product page

Caption: Simplified signaling pathways modulated by Bufalin in cancer cells.

Experimental Workflow for Comparative Metabolomics

The following diagram outlines the key steps involved in a typical untargeted metabolomics experiment to compare the effects of different drug treatments on cancer cells.

© 2026 BenchChem. All rights reserved.

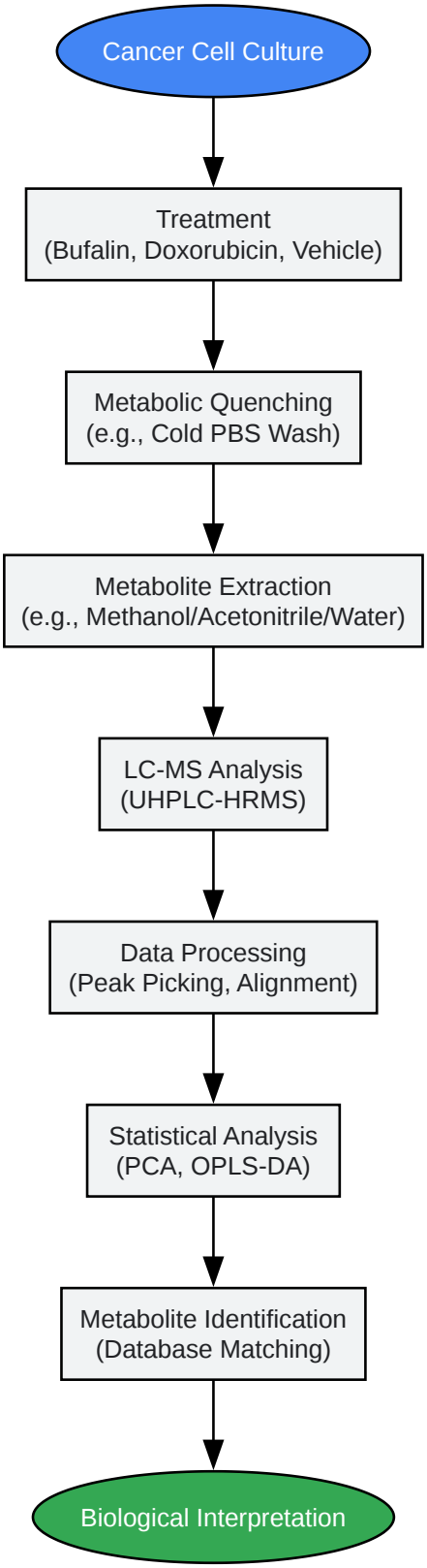

Click to download full resolution via product page

Caption: General workflow for a cell-based untargeted metabolomics study.

© 2026 BenchChem. All rights reserved.

Need Custom Synthesis?

BenchChem offers custom synthesis for rare earth carbides and specific isotopiclabeling.

Email: info@benchchem.com or Request Quote Online.

References

- 1. Global Metabolomic and Lipidomic Analysis Reveal the Synergistic Effect of Bufalin in Combination with Cinobufagin against HepG2 Cells - PubMed [pubmed.ncbi.nlm.nih.gov]
- 2. researchgate.net [researchgate.net]
- 3. Global Metabolomic and Lipidomic Analysis Reveal the Synergistic Effect of Bufalin in Combination with Cinobufagin against HepG2 Cells. | Semantic Scholar [semanticscholar.org]
- 4. Metabolomic Signatures in Doxorubicin-Induced Metabolites Characterization, Metabolic Inhibition, and Signaling Pathway Mechanisms in Colon Cancer HCT116 Cells - PMC [pmc.ncbi.nlm.nih.gov]
- 5. scholars.hkbu.edu.hk [scholars.hkbu.edu.hk]
- 6. Metabolic Signatures of Tumor Responses to Doxorubicin Elucidated by Metabolic Profiling in Ovo - PMC [pmc.ncbi.nlm.nih.gov]
- To cite this document: BenchChem. [Comparative Metabolomics of Bufalin-Treated Cells: A Guide for Researchers]. BenchChem, [2026]. [Online PDF]. Available at: [https://www.benchchem.com/product/b098413/docs#comparative-metabolomics-of-bufalin-treated-cells-a-guide-for-researchers]

Disclaimer & Data Validity:

The information provided in this document is for Research Use Only (RUO) and is strictly not intended for diagnostic or therapeutic procedures. While BenchChem strives to provide accurate protocols, we make no warranties, express or implied, regarding the fitness of this product for every specific experimental setup.

Technical Support: The protocols provided are for reference purposes. Unsure if this reagent suits your experiment?

© 2026 BenchChem. All rights reserved.

Need Industrial/Bulk Grade? Request Custom Synthesis Quote

BenchChem

Our mission is to be the trusted global source of essential and advanced chemicals, empowering scientists and researchers to drive progress in science and industry.

Contact

Address: 3281 E Guasti Rd

Ontario, CA 91761, United States

Phone: (601) 213-4426

Email: info@benchchem.com

Contact our Ph.D. Support Team for a compatibility check

© 2026 BenchChem. All rights reserved.