Application of Zwitterionic Surfactants in Protein Extraction from Tissue: Application Notes and Protocols

Author: BenchChem Technical Support Team. **Date**: April 2026

Compound of Interest

Compound Name:	*n,n-bis[2-(octylamino)ethyl]glycine*
CAS No.:	*17670-95-0*
Cat. No.:	*B096743*

Get Quote

For Researchers, Scientists, and Drug Development Professionals

Introduction

Zwitterionic surfactants are a class of detergents that possess both a positive and a negative charge on their hydrophilic head group, resulting in a net neutral charge over a wide pH range. This unique characteristic makes them particularly well-suited for protein extraction from tissues, as they can effectively disrupt cell membranes and solubilize proteins while minimizing protein denaturation and preserving their native structure and function.[1][2][3] This is crucial for downstream applications such as enzyme assays, immunoprecipitation, and structural studies.[1][4]

This document provides detailed application notes and protocols for the use of common zwitterionic surfactants in protein extraction from various tissues, with a focus on CHAPS and the amidosulfobetaine ASB-14.

© 2026 BenchChem. All rights reserved.

Key Zwitterionic Surfactants for Protein Extraction

Several zwitterionic surfactants are commonly employed in protein extraction, each with distinct properties:

- CHAPS (3-[(3-Cholamidopropyl)dimethylammonio]-1-propanesulfonate): A widely used, non-denaturing detergent that is effective in solubilizing membrane proteins and breaking protein-protein interactions.[2][5] It has a high critical micelle concentration (CMC) of 6-10 mM, which allows for its easy removal by dialysis.[6][7]

- CHAPSO (3-[(3-Cholamidopropyl)dimethylammonio]-2-hydroxy-1-propanesulfonate): Structurally similar to CHAPS but with an additional hydroxyl group, making it more hydrophilic.

- Sulfobetaines (e.g., ASB-14): This class of surfactants, such as amidosulfobetaine-14 (ASB-14), has shown superior solubilizing power for membrane proteins compared to CHAPS in some applications.[8] They are particularly useful for proteomics and 2D-electrophoresis.[6][9]

The choice of surfactant often depends on the specific tissue type and the downstream application. In many cases, a combination of detergents can provide superior extraction efficiency.[5]

Quantitative Data on Protein Extraction Efficiency

The efficiency of protein extraction can vary significantly depending on the tissue type, the surfactant used, and the extraction protocol. The following table summarizes representative protein yields obtained from various mammalian tissues using different extraction methods, including those with zwitterionic surfactants.

© 2026 BenchChem. All rights reserved.

Tissue	Surfactant/Method	Protein Yield (mg/g wet tissue)	Reference
Mouse Brain	N-PER Reagent (detergent-based)	~18.3 mg from one hemisphere	[2]
Mouse Brain	SDS-based method	~100 µg/mg (or 100 mg/g)	[8][10]
Mouse Brain	Soluble fraction extraction	2-4 mg/mL from 100 mg tissue in 700 µL buffer	[11]
Mouse Liver	RIPA buffer	2-4 mg/g	[3]
Rat Liver	Homogenization in KCl buffer	~104 mg/g	[12]
Rat Hippocampus	RIPA buffer	~1.5-2 mg from 100 mg tissue	[13]

Note: This table is a compilation of data from multiple sources and experimental conditions may vary.

Experimental Protocols

Protocol 1: General Protein Extraction from Mammalian Tissue using CHAPS

This protocol is a general guideline and may require optimization for specific tissues.

Materials:

- Tissue sample (e.g., liver, kidney, muscle)
- CHAPS Lysis Buffer:
  - 50 mM Tris-HCl, pH 7.4
  - 150 mM NaCl

© 2026 BenchChem. All rights reserved.

  - 1% (w/v) CHAPS
  - 1 mM EDTA
  - Protease inhibitor cocktail (add fresh)
  - Phosphatase inhibitor cocktail (optional, add fresh)
- Dounce homogenizer or mechanical tissue disruptor
- Microcentrifuge
- Phosphate-Buffered Saline (PBS), ice-cold

Procedure:

- Tissue Preparation: Excise the tissue of interest and wash it with ice-cold PBS to remove any contaminants.
- Homogenization: Weigh the tissue and place it in a pre-chilled Dounce homogenizer. Add 5-10 volumes of ice-cold CHAPS Lysis Buffer per gram of tissue.
- Homogenize the tissue on ice with 10-15 strokes of the pestle. For tougher tissues, a mechanical disruptor may be necessary.
- Lysis: Transfer the homogenate to a pre-chilled microcentrifuge tube. Incubate on a rotator or rocker at 4°C for 30-60 minutes to allow for complete lysis.
- Clarification: Centrifuge the lysate at 14,000 x g for 15-20 minutes at 4°C to pellet cellular debris.
- Supernatant Collection: Carefully transfer the supernatant, which contains the solubilized proteins, to a new pre-chilled microcentrifuge tube.
- Protein Quantification: Determine the protein concentration of the extract using a suitable method, such as the Bradford or BCA assay.
- Storage: Aliquot the protein extract and store at -80°C for long-term use.

© 2026 BenchChem. All rights reserved.

Protocol 2: Membrane Protein Solubilization from Tissue using ASB-14 for 2D Electrophoresis

This protocol is specifically designed for the solubilization of membrane proteins for downstream applications like 2D gel electrophoresis.[9]

Materials:

- Tissue membrane fraction (prepared by differential centrifugation)
- ASB-14 Solubilization Buffer:
  - 7 M Urea
  - 2 M Thiourea
  - 2-4% (w/v) ASB-14
  - 40 mM Tris base
  - 65 mM DTT (add fresh)
  - Protease inhibitor cocktail (add fresh)
- Vortex mixer
- Microcentrifuge

Procedure:

- Resuspension: Resuspend the isolated membrane pellet in the ASB-14 Solubilization Buffer. The buffer volume should be adjusted to achieve the desired final protein concentration.
- Solubilization: Vortex the mixture vigorously for 5-10 minutes at room temperature.
- Incubate the sample at room temperature for 1 hour with occasional vortexing to ensure complete solubilization.

© 2026 BenchChem. All rights reserved.

- Clarification: Centrifuge the sample at 15,000 x g for 15 minutes at room temperature to pellet any insoluble material.
- Supernatant Collection: Carefully collect the supernatant containing the solubilized membrane proteins.
- Downstream Application: The protein extract is now ready for isoelectric focusing (IEF) and 2D gel electrophoresis.

Mechanism of Action and Workflow Diagrams

The primary mechanism by which zwitterionic surfactants extract proteins from tissue involves the disruption of the lipid bilayer of cell membranes and the subsequent solubilization of membrane-bound and intracellular proteins.

© 2026 BenchChem. All rights reserved.

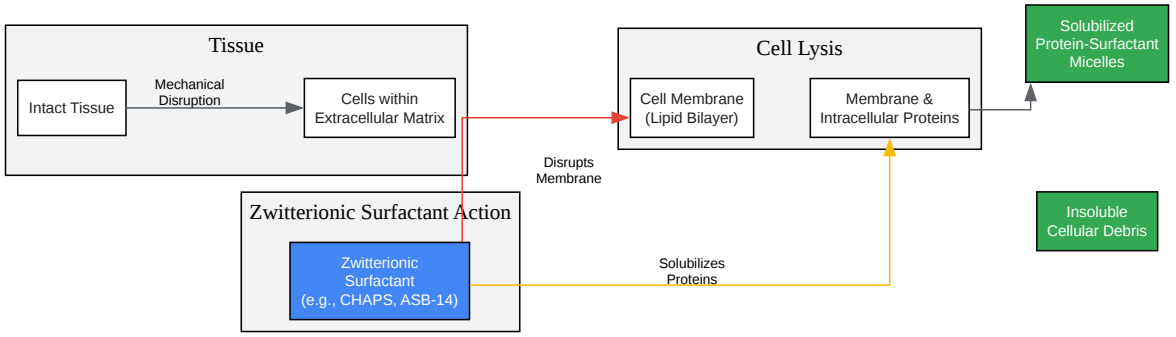

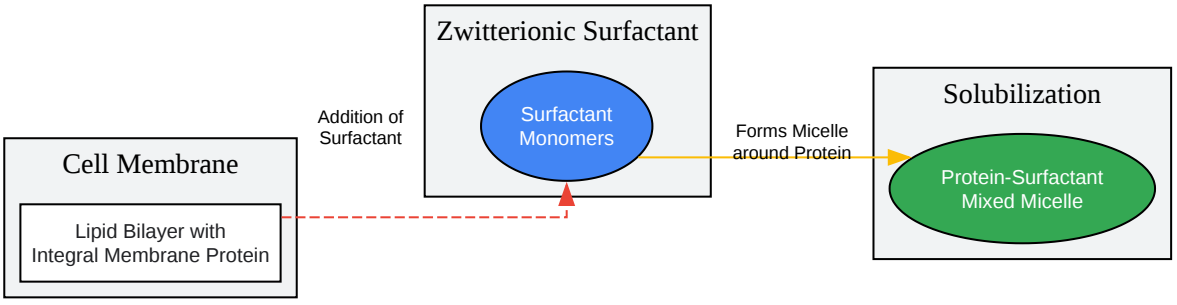

Click to download full resolution via product page

© 2026 BenchChem. All rights reserved.

Need Custom Synthesis?

BenchChem offers custom synthesis for rare earth carbides and specific isotopiclabeling.

Email: info@benchchem.com or Request Quote Online.

References

- 1. researchgate.net [researchgate.net]
- 2. Neuronal Protein Extraction | Thermo Fisher Scientific - HK [thermofisher.com]
- 3. researchgate.net [researchgate.net]
- 4. cube-biotech.com [cube-biotech.com]
- 5. apexbt.com [apexbt.com]
- 6. mdpi.com [mdpi.com]
- 7. agscientific.com [agscientific.com]
- 8. Optimized protein extraction from cryopreserved brain tissue samples - PubMed [pubmed.ncbi.nlm.nih.gov]
- 9. Enhanced detergent extraction for analysis of membrane proteomes by two-dimensional gel electrophoresis - PMC [pmc.ncbi.nlm.nih.gov]
- 10. medicaljournalssweden.se [medicaljournalssweden.se]
- 11. Extraction of Soluble and Insoluble Protein Fractions from Mouse Brains and Spinal Cords - PMC [pmc.ncbi.nlm.nih.gov]
- 12. researchgate.net [researchgate.net]
- 13. researchgate.net [researchgate.net]
- To cite this document: BenchChem. [Application of Zwitterionic Surfactants in Protein Extraction from Tissue: Application Notes and Protocols]. BenchChem, [2026]. [Online PDF]. Available at: [https://www.benchchem.com/product/b096743/docs#application-of-zwitterionic-surfactants-in-protein-extraction-from-tissue-application-notes-and-protocols]

Disclaimer & Data Validity:

The information provided in this document is for Research Use Only (RUO) and is strictly not intended for diagnostic or therapeutic procedures. While BenchChem strives to provide

accurate protocols, we make no warranties, express or implied, regarding the fitness of this product for every specific experimental setup.

Technical Support: The protocols provided are for reference purposes. Unsure if this reagent suits your experiment?

Need Industrial/Bulk Grade? Request Custom Synthesis Quote

BenchChem

Our mission is to be the trusted global source of essential and advanced chemicals, empowering scientists and researchers to drive progress in science and industry.

Contact

Address: 3281 E Guasti Rd

Ontario, CA 91761, United States

Phone: (601) 213-4426

Email: info@benchchem.com

Contact our Ph.D. Support Team for a compatibility check

© 2026 BenchChem. All rights reserved.