Application Notes & Protocols: Quantitative Structure-Activity Relationship (QSAR) Modeling for Thiosemicarbazones

Author: BenchChem Technical Support Team. **Date**: January 2026

Compound of Interest		
Compound Name:	*4-(4-Methoxybenzyl)-3-thiosemicarbazide*	
Cat. No.:	*B096911*	*Get Quote*

Abstract

This comprehensive guide provides a detailed framework for developing robust and predictive Quantitative Structure-Activity Relationship (QSAR) models for thiosemicarbazone derivatives. Thiosemicarbazones are a versatile class of compounds known for their wide range of biological activities, including anticancer, antibacterial, and antiviral properties.[1][2][3][4][5] QSAR modeling serves as a powerful in silico tool in drug discovery to predict the biological activity of novel compounds, thereby prioritizing synthesis and reducing costs.[6][7][8] This document is intended for researchers, scientists, and drug development professionals, offering both theoretical insights and practical, step-by-step protocols for building, validating, and interpreting QSAR models. We will delve into data preparation, descriptor calculation, model construction using various techniques, and rigorous validation in line with international standards.

Introduction: The Rationale for QSAR in Thiosemicarbazone Drug Discovery

Thiosemicarbazones are characterized by the toxophoric N-N-C-S group and have demonstrated significant potential in medicinal chemistry due to their ability to chelate metal ions, which is often linked to their biological activity.[4][5] The structural diversity that can be

© 2025 BenchChem. All rights reserved.

achieved by modifying different parts of the thiosemicarbazone scaffold makes this class of compounds particularly amenable to QSAR studies.

QSAR modeling establishes a mathematical relationship between the chemical structure of a compound and its biological activity.[7][9] By quantifying how changes in molecular features (descriptors) affect a compound's potency, we can develop predictive models.[8] These models are invaluable for:

- Rational Drug Design: Guiding the design of new, more potent thiosemicarbazone analogues.[8]
- Virtual Screening: Efficiently screening large libraries of virtual compounds to identify promising candidates for synthesis and testing.[10]
- Mechanistic Insights: Understanding the key molecular properties that drive the biological activity of thiosemicarbazones.

This guide will walk you through the essential steps to construct a scientifically sound QSAR model, emphasizing the principles of validation to ensure its predictive power and regulatory acceptance.

The QSAR Workflow: A Conceptual Overview

A successful QSAR modeling project follows a systematic workflow. Each step is critical for the development of a robust and predictive model.

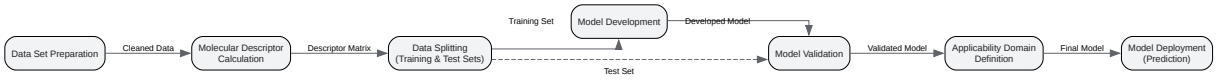

Click to download full resolution via product page

Figure 1: A generalized workflow for QSAR model development.

Part I: Data Set Preparation and Curation

© 2025 BenchChem. All rights reserved.

The quality of your QSAR model is fundamentally dependent on the quality of your input data. The objective of this phase is to assemble a curated dataset of thiosemicarbazone compounds with reliable biological activity data.

Protocol 1: Data Set Curation

- Data Collection:
  - Gather a diverse set of thiosemicarbazone structures and their corresponding biological activities (e.g., IC50, MIC, pIC50) from literature or internal databases. For this protocol, we will assume we are modeling the anticancer activity of a series of novel quinolinone-based thiosemicarbazones against Mycobacterium tuberculosis.[11]
  - Ensure that the biological data was obtained using a consistent experimental protocol to avoid introducing variability.
- Data Standardization:
  - Convert all compound structures into a uniform format, such as SMILES (Simplified Molecular Input Line Entry System).
  - Standardize chemical structures: neutralize salts, remove counter-ions, and handle tautomeric forms consistently.
  - Transform the biological activity data to a suitable scale. For instance, convert IC50 values to pIC50 (-logIC50) to achieve a more normal distribution of data.
- Data Cleaning:
  - Remove duplicate structures.
  - Identify and remove outliers. Outliers can be compounds with erroneous activity data or those that are structurally very different from the rest of the dataset.

Part II: Molecular Descriptor Calculation

Molecular descriptors are numerical values that represent the physicochemical, topological, or electronic properties of a molecule.[1] The choice of descriptors is crucial as they form the

© 2025 BenchChem. All rights reserved.

basis of the structure-activity relationship.

Protocol 2: Descriptor Calculation

- Software Selection:
  - Utilize specialized software to calculate molecular descriptors. A variety of free and commercial software packages are available.

Software	Key Features
PaDEL-Descriptor	Open-source, calculates a wide range of 1D, 2D, and 3D descriptors.
RDKit	Open-source Python library for cheminformatics, offers extensive descriptor calculation capabilities.
Dragon	Commercial software known for its comprehensive set of descriptors.[12]
VLifeMDS (QSARpro)	A comprehensive suite with a large collection of 2D and 3D descriptors.[13]
Discovery Studio	A broad computational chemistry software with QSAR modeling capabilities.[12]

- Descriptor Classes:
  - Calculate a range of descriptors to capture different aspects of the molecular structure. It is common to start with 2D descriptors and move to 3D if necessary.

© 2025 BenchChem. All rights reserved.

Descriptor Class	Examples	Description
1D Descriptors	Molecular Weight, Atom Count, LogP	Basic physicochemical properties.
2D Descriptors	Topological Indices (e.g., Wiener, Randić), Connectivity Indices	Describe the topology and connectivity of atoms.
3D Descriptors	van der Waals Volume, Solvent Accessible Surface Area	Depend on the 3D conformation of the molecule.

- Descriptor Pre-processing:
  - Remove constant and near-constant descriptors.
  - Check for and remove highly correlated descriptors to avoid multicollinearity in the model.

Part III: Model Development and Validation

This is the core of the QSAR process where a mathematical model is built and its predictive power is rigorously assessed.

Protocol 3: Data Splitting and Model Building

- Data Splitting:
  - Divide the curated dataset into a training set and a test set.[14] The training set is used to build the model, while the test set is used for external validation to assess its predictive performance on new data.[8] A common split is 70-80% for the training set and 20-30% for the test set.
  - Employ a rational splitting method, such as the Kennard-Stone algorithm, to ensure that both the training and test sets span the entire descriptor space of the dataset.[14]
- Model Building:
  - Select an appropriate statistical or machine learning method to build the QSAR model.

© 2025 BenchChem. All rights reserved.

A. Classical QSAR Methods:

- Hansch Analysis: Correlates biological activity with physicochemical parameters like hydrophobicity (π), electronic effects (σ), and steric effects (Es).[15][16][17]
- Free-Wilson Analysis: Assumes that the contribution of each substituent to the overall biological activity is additive.[15][16]

B. Machine Learning Approaches:

- Machine learning algorithms are increasingly used in QSAR due to their ability to handle complex, non-linear relationships.[6][7][18][19]
- Commonly used algorithms include:
  - Multiple Linear Regression (MLR)
  - Partial Least Squares (PLS)
  - Support Vector Machines (SVM)
  - Random Forest (RF)
  - Artificial Neural Networks (ANN)[20][21]

Protocol 4: Rigorous Model Validation

Model validation is essential to ensure that the developed QSAR model is robust, predictive, and not a result of chance correlation.[10][22] Validation should adhere to the principles established by the Organisation for Economic Co-operation and Development (OECD).[22][23][24][25][26]

© 2025 BenchChem. All rights reserved.

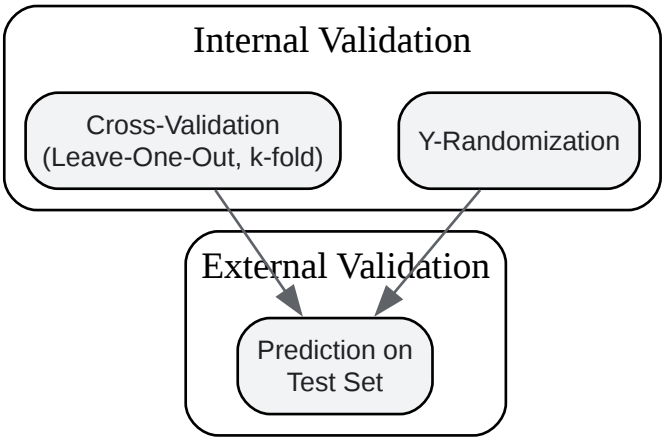

Click to download full resolution via product page

Figure 2: Key components of QSAR model validation.

- Internal Validation:
  - Cross-Validation: This is typically performed on the training set. In leave-one-out (LOO) cross-validation, one compound is removed from the training set, a model is built with the remaining compounds, and the activity of the removed compound is predicted. This is repeated for all compounds in the training set. The cross-validated correlation coefficient (q^2) is a key metric. A $q^2 > 0.5$ is generally considered acceptable.[27]
  - Y-Randomization: The biological activity values in the training set are randomly shuffled, and a new QSAR model is built using the original descriptor matrix. This process is repeated multiple times. If the original model has a significantly higher correlation coefficient than the randomized models, it indicates that the model is not due to chance correlation.
- External Validation:
  - The predictive power of the model is assessed using the independent test set that was not used during model development.
  - The predicted activities for the test set compounds are compared to their experimental values. The predictive correlation coefficient (R^2_pred) is calculated. An R^2_pred > 0.6 is often considered indicative of a good predictive model.[27]

© 2025 BenchChem. All rights reserved.

Validation Parameter	Description	Acceptable Value
R^2 (Coefficient of Determination)	Goodness-of-fit for the training set.	> 0.6
q^2 (Cross-validated R^2)	Internal predictive ability.	> 0.5
R^2_pred (Predictive R^2)	External predictive ability on the test set.	> 0.6

Part IV: Advanced 3D-QSAR Modeling

For a deeper understanding of the structure-activity relationship, 3D-QSAR methods can be employed. These methods consider the three-dimensional properties of the molecules.

Protocol 5: 3D-QSAR with CoMFA and CoMSIA

- Molecular Alignment:
  - This is the most critical step in 3D-QSAR. All molecules in the dataset must be aligned in a common orientation. This can be done based on a common scaffold or by docking into a receptor active site if the structure is known.
- Comparative Molecular Field Analysis (CoMFA):
  - CoMFA calculates steric and electrostatic fields around the aligned molecules.[9][28][29][30][31] These fields are then correlated with biological activity using PLS.
  - The results are often visualized as contour maps, indicating regions where steric bulk or specific electrostatic properties are favorable or unfavorable for activity.
- Comparative Molecular Similarity Indices Analysis (CoMSIA):
  - CoMSIA is similar to CoMFA but calculates additional fields, including hydrophobic, hydrogen bond donor, and hydrogen bond acceptor fields.[32][28][30][31] This can provide a more detailed understanding of the ligand-receptor interactions.

© 2025 BenchChem. All rights reserved.

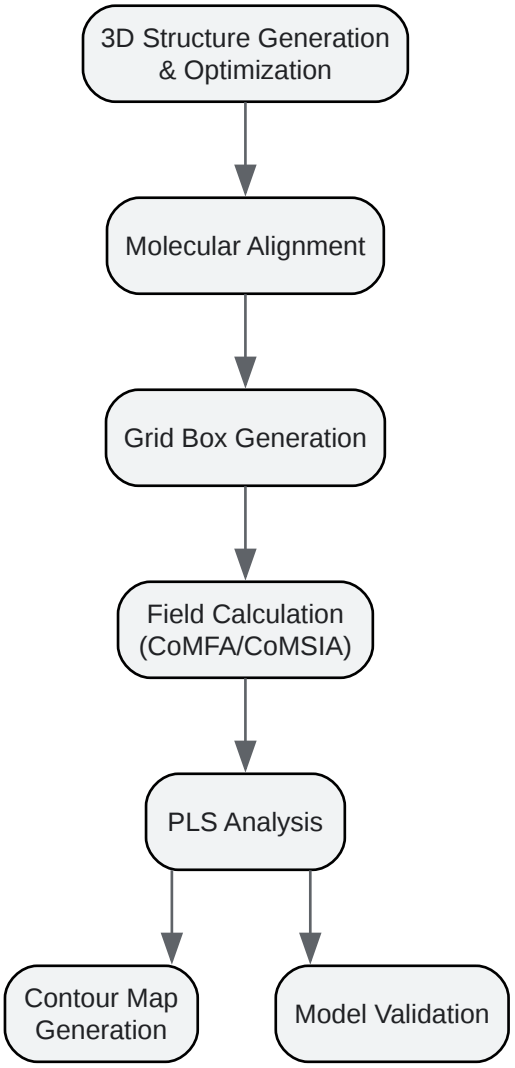

Click to download full resolution via product page

Figure 3: Workflow for 3D-QSAR modeling.

Defining the Applicability Domain

A QSAR model can only make reliable predictions for compounds that are similar to those in the training set. The Applicability Domain (AD) defines this chemical space.[22] It is a crucial OECD principle for the regulatory acceptance of QSAR models.[22] Predictions for compounds outside the AD are considered extrapolations and are less reliable.

Conclusion and Future Perspectives

© 2025 BenchChem. All rights reserved.

This guide has outlined a comprehensive and validated workflow for developing QSAR models for thiosemicarbazones. By following these protocols, researchers can build predictive models that can significantly accelerate the drug discovery process. The integration of machine learning and artificial intelligence is continually advancing the field of QSAR, enabling the development of more accurate and sophisticated models from increasingly large and complex datasets.[19]

References

- A. K. Srivastava, A. Kumar, A. K. Maurya, and S. K. Singh, "QSAR, molecular docking, and pharmacokinetic analysis of thiosemicarbazone-indole compounds targeting prostate cancer cells," Journal of Biomolecular Structure and Dynamics, vol. 41, no. 1, pp. 1-15, 2023. [Link]
- J. K. Seydel and M. Wiese, "Validation of QSAR models for legislative purposes," QSAR & Combinatorial Science, vol. 25, no. 1, pp. 61-68, 2006. [Link]
- H. Kubinyi, "Free Wilson Analysis. Theory, Applications and its Relationship to Hansch Analysis," QSAR: Hansch Analysis and Related Approaches, pp. 123-143, 1993. [Link]
- A. K. Singh, "Advances in Machine Learning for QSAR Modeling," in Enhancing Drug Discovery with Machine Learning and Artificial Intelligence, 2023. [Link]
- S. Basak, "Machine learning and traditional QSAR modeling methods: a case study of known PXR activators," Journal of Cheminformatics, vol. 14, no. 1, p. 5, 2022. [Link]
- Slideshare, "Hansch and Free-Wilson QSAR Models." [Link]
- DrOmics Labs, "QSAR and ML: A Powerful Combination for Drug Discovery," 2023. [Link]
- Drug Design Org, "QSAR." [Link]
- MDPI, "AI-Integrated QSAR Modeling for Enhanced Drug Discovery: From Classical Approaches to Deep Learning and Structural Insight," International Journal of Molecular Sciences, vol. 24, no. 1, p. 1, 2023. [Link]
- Pars Silico, "The Top 10 Software for QSAR Analysis." [Link]
- CORAL, "CORAL/Free software for QSAR and nanoQSAR." [Link]

© 2025 BenchChem. All rights reserved.

- Basicmedical Key, "Validation of QSAR Models," 2016. [Link]
- Slideshare, "QSAR applications: Hansch analysis and Free Wilson analysis, CADD." [Link]
- A. Tropsha, "Best Practices for QSAR Model Development, Validation, and Exploitation," Molecular Informatics, vol. 29, no. 6-7, pp. 476-488, 2010. [Link]
- Optibrium, "Machine Learning 101: How to train your first QSAR model." [Link]
- Institute of Molecular and Translational Medicine, Palacky University, "QSAR modeling software and virtual screening." [Link]
- Pharmacelera, "PharmQSAR - 3D QSAR Software Package." [Link]
- Semantic Scholar, "Best Practices for QSAR Model Development, Validation, and Exploitation." [Link]
- MDPI, "Comparative Molecular Field Analysis (CoMFA) and Comparative Molecular Similarity Indices Analysis (CoMSIA) Studies on α1A-Adrenergic Receptor Antagonists Based on Pharmacophore Molecular Alignment," Molecules, vol. 18, no. 12, pp. 15304-15327, 2013. [Link]
- Quora, "What are the steps of QSAR based drug design?," 2016. [Link]
- MDPI, "Thiosemicarbazone-Based Compounds: Cancer Cell Inhibitors with Antioxidant Properties," International Journal of Molecular Sciences, vol. 24, no. 1, p. 1, 2023. [Link]
- VLife Sciences, "QSAR, QSAR descriptors, 2D QSAR, 3D QSAR, QSAR modeling Software." [Link]
- S. N. Pandeya, "Application of CoMFA and CoMSIA 3D-QSAR and docking studies in optimization of mercaptobenzenesulfonamides as HIV-1 integrase inhibitors," European Journal of Medicinal Chemistry, vol. 45, no. 5, pp. 1913-1922, 2010. [Link]
- Slideshare, "3d qsar." [Link]
- H. Kubinyi, "QSAR: Hansch Analysis and Related Approaches," 1993. [Link]

© 2025 BenchChem. All rights reserved.

- Taylor & Francis Online, "CoMFA and CoMSIA 3D-QSAR analysis on hydroxamic acid derivatives as urease inhibitors," Journal of Enzyme Inhibition and Medicinal Chemistry, vol. 29, no. 4, pp. 533-540, 2014. [Link]
- Pharmacy 180, "Historical Development of QSAR - Hansch Analysis, Free-Wilson Analysis." [Link]
- A. Tropsha, "Best Practices for QSAR Model Development, Validation, and Exploitation," Molecular Informatics, vol. 29, no. 6-7, pp. 476-488, 2010. [Link]
- C. J. Anderson, "QSAR Studies of Copper Azamacrocycles and Thiosemicarbazones: MM3 Parameter Development and Prediction of Biological Properties," Journal of Chemical Information and Modeling, vol. 48, no. 11, pp. 2216-2226, 2008. [Link]
- OECD, "Guidance Document on the Validation of (Quantitative) Structure-Activity Relationship [(Q)SAR] Models." [Link]
- KREATiS, "OECD QSAR Assessment Framework (QAF)." [Link]
- W. Li, "3D-QSAR (CoMFA, CoMSIA), molecular docking and molecular dynamics simulations study of 6-aryl-5-cyano-pyrimidine derivatives to explore the structure requirements of LSD1 inhibitors," Bioorganic & Medicinal Chemistry Letters, vol. 27, no. 15, pp. 3521-3528, 2017. [Link]
- MDPI, "QSAR Studies, Molecular Docking, Molecular Dynamics, Synthesis, and Biological Evaluation of Novel Quinolinone-Based Thiosemicarbazones against Mycobacterium tuberculosis," Molecules, vol. 26, no. 1, p. 1, 2021. [Link]
- MDPI, "Thiosemicarbazone-Based Compounds: A Promising Scaffold for Developing Antibacterial, Antioxidant, and Anticancer Therapeutics," International Journal of Molecular Sciences, vol. 24, no. 1, p. 1, 2023. [Link]
- Neovarsity, "A Beginner's Guide to QSAR Modeling in Cheminformatics for Biopharma," 2024. [Link]
- Neovarsity, "Beginner's Guide to 3D-QSAR in Drug Design," 2025. [Link]

© 2025 BenchChem. All rights reserved.

- ResearchGate, "Anticancer activities of thiosemicarbazides/thiosemicarbazones: A review," 2014. [Link]
- A. Mrozek-Wilczkiewicz, "Anticancer activity of the thiosemicarbazones that are based on di-2-pyridine ketone and quinoline moiety," European Journal of Medicinal Chemistry, vol. 173, pp. 246-262, 2019. [Link]
- TSI Journals, "Organic CHEMISTRY." [Link]
- ResearchGate, "The OECD principle guidelines for developing and validating QSAR model." [Link]
- Wikipedia, "Quantitative structure–activity relationship." [Link]
- ACS Publications, "Novel Thiosemicarbazone Quantum Dots in the Treatment of Alzheimer's Disease Combining In Silico Models Using Fingerprints and Physicochemical Descriptors," ACS Omega, vol. 7, no. 43, pp. 38641-38654, 2022. [Link]
- M. S. Islam, "Synthesis, characterization, antibacterial activity of thiosemicarbazones derivatives and their computational approaches: Quantum calculation, molecular docking, molecular dynamic, ADMET, QSAR," Heliyon, vol. 9, no. 6, p. e16584, 2023. [Link]
- ResearchGate, "Discovery of novel metal-thiosemicarbazone complexes using QSPR modeling methods," 2025. [Link]
- ResearchGate, "Development of QSPR models for novel thiosemicarbazones as potential complexing ligands for metal ion analysis," 2025. [Link]
- OUCI, "Synthesis, characterization, antibacterial activity of thiosemicarbazones derivatives and their computational approaches..." [Link]

Need Custom Synthesis?

BenchChem offers custom synthesis for rare earth carbides and specific isotopiclabeling.

Email: info@benchchem.com or Request Quote Online.

Sources

- 1. QSAR, molecular docking, and pharmacokinetic analysis of thiosemicarbazone-indole compounds targeting prostate cancer cells - PMC [pmc.ncbi.nlm.nih.gov]
- 2. mdpi.com [mdpi.com]
- 3. mdpi.com [mdpi.com]
- 4. researchgate.net [researchgate.net]
- 5. Anticancer activity of the thiosemicarbazones that are based on di-2-pyridine ketone and quinoline moiety - PubMed [pubmed.ncbi.nlm.nih.gov]
- 6. taylorfrancis.com [taylorfrancis.com]
- 7. dromicslabs.com [dromicslabs.com]
- 8. QSAR - Drug Design Org [drugdesign.org]
- 9. Quantitative structure–activity relationship - Wikipedia [en.wikipedia.org]
- 10. Best Practices for QSAR Model Development, Validation, and Exploitation - PubMed [pubmed.ncbi.nlm.nih.gov]
- 11. QSAR Studies, Molecular Docking, Molecular Dynamics, Synthesis, and Biological Evaluation of Novel Quinolinone-Based Thiosemicarbazones against Mycobacterium tuberculosis - PMC [pmc.ncbi.nlm.nih.gov]
- 12. The Top 10 Software for QSAR Analysis [parssilico.com]
- 13. QSAR, QSAR descriptors, 2D QSAR, 3D QSAR, QSAR modeling Software [vlifesciences.com]
- 14. neovarsity.org [neovarsity.org]
- 15. elearning.uniroma1.it [elearning.uniroma1.it]
- 16. Hansch and Free-Wilson QSAR Models | PPTX [slideshare.net]
- 17. QSAR applications: Hansch analysis and Free Wilson analysis, CADD | PPTX [slideshare.net]
- 18. Machine learning and traditional QSAR modeling methods: a case study of known PXR activators - PubMed [pubmed.ncbi.nlm.nih.gov]
- 19. mdpi.com [mdpi.com]
- 20. Novel Thiosemicarbazone Quantum Dots in the Treatment of Alzheimer’s Disease Combining In Silico Models Using Fingerprints and Physicochemical Descriptors - PMC [pmc.ncbi.nlm.nih.gov]

© 2025 BenchChem. All rights reserved.

- 21. researchgate.net [researchgate.net]
- 22. Validation of QSAR Models | Basicmedical Key [basicmedicalkey.com]
- 23. Validation of QSAR models for legislative purposes - PMC [pmc.ncbi.nlm.nih.gov]
- 24. oecd.org [oecd.org]
- 25. api.kreatis.eu [api.kreatis.eu]
- 26. researchgate.net [researchgate.net]
- 27. elearning.uniroma1.it [elearning.uniroma1.it]
- 28. Application of CoMFA and CoMSIA 3D-QSAR and docking studies in optimization of mercaptobenzenesulfonamides as HIV-1 integrase inhibitors - PubMed [pubmed.ncbi.nlm.nih.gov]
- 29. 3d qsar | PPTX [slideshare.net]
- 30. tandfonline.com [tandfonline.com]
- 31. 3D-QSAR (CoMFA, CoMSIA), molecular docking and molecular dynamics simulations study of 6-aryl-5-cyano-pyrimidine derivatives to explore the structure requirements of LSD1 inhibitors - PubMed [pubmed.ncbi.nlm.nih.gov]
- 32. mdpi.com [mdpi.com]

- To cite this document: BenchChem. [Application Notes & Protocols: Quantitative Structure-Activity Relationship (QSAR) Modeling for Thiosemicarbazones]. BenchChem, [2026]. [Online PDF]. Available at: [https://www.benchchem.com/product/b096911#quantitative-structure-activity-relationship-qsar-modeling-for-thiosemicarbazones]

Disclaimer & Data Validity:

The information provided in this document is for Research Use Only (RUO) and is strictly not intended for diagnostic or therapeutic procedures. While BenchChem strives to provide accurate protocols, we make no warranties, express or implied, regarding the fitness of this product for every specific experimental setup.

Technical Support: The protocols provided are for reference purposes. Unsure if this reagent suits your experiment? [Contact our Ph.D. Support Team for a compatibility check]

Need Industrial/Bulk Grade? Request Custom Synthesis Quote

© 2025 BenchChem. All rights reserved.

BenchChem

Our mission is to be the trusted global source of essential and advanced chemicals, empowering scientists and researchers to drive progress in science and industry.

Contact

Address: 3281 E Guasti Rd

Ontario, CA 91761, United States

Phone: (601) 213-4426

Email: info@benchchem.com

© 2025 BenchChem. All rights reserved.