Application Note: Electrochemical Synthesis Using Potassium Hexafluoroarsenate ( )

Author: BenchChem Technical Support Team. **Date**: February 2026

Compound of Interest		
Compound Name:	*Potassium hexafluoroarsenate*	
CAS No.:	*17029-22-0*	
Cat. No.:	*B095478*	Get Quote

Executive Summary

Potassium Hexafluoroarsenate (

) represents a specialized class of electrolyte salts distinguished by the extreme anodic stability of the hexafluoroarsenate anion (

). While less common than its lithium (

) or tetrabutylammonium (

) counterparts due to solubility constraints,

is critical in specific electrochemical niches: Potassium-Ion Battery (KIB) research, Graphite Intercalation Compound (GIC) synthesis, and electropolymerization requiring non-nucleophilic anions.

This guide details the handling, solubility engineering, and experimental protocols for utilizing

to synthesize high-stage GICs and doped conducting polymers.

Chemical Profile & Electrolyte Engineering

Why ?

The utility of

© 2026 BenchChem. All rights reserved.

rests on the properties of the

anion and the

cation:

- Anodic Stability:

  resists oxidation up to ~5.5 V vs.

  (approx. 5.8 V vs.

  ), making it superior to

  and

  for high-voltage synthesis.

- Non-Nucleophilicity: The anion interacts weakly with radical cations, preventing termination reactions during the electropolymerization of aromatics (e.g., benzene, pyrrole).

- Intercalation Kinetics: The

  anion forms stable stage-1 and stage-2 intercalation compounds with graphite, essential for fundamental conductivity studies.

Solubility & Solvent Selection

Unlike organic salts (

),

has limited solubility in low-polarity solvents. Successful synthesis requires high-dielectric aprotic solvents.

© 2026 BenchChem. All rights reserved.

Solvent System	Solubility Rating	Application Notes
Propylene Carbonate (PC)	Moderate (~0.5–0.9 M)	Preferred medium. High dielectric constant ( ). Stable at high voltage.
Dimethoxyethane (DME)	Moderate	Good for K-ion battery half-cells; lower anodic stability than PC.
Acetonitrile (ACN)	Low/Moderate	Often requires complexing agents (crown ethers) to boost solubility.
Liquid	High	Historical standard for superacidic chemistry, but requires cryogenic/pressurized setups.
Benzene/Toluene	Insoluble	Requires phase transfer catalysts or cosolvents (e.g., Nitrobenzene).

Safety & Handling (CRITICAL)

WARNING:

contains both Arsenic and Fluorine.

- Toxicity: Arsenic compounds are known carcinogens and acute toxins. All weighing must occur in a certified fume hood or glovebox.
- Hydrolysis Risk:

  is stable in anhydrous conditions but hydrolyzes in moisture to release Hydrogen Fluoride (HF) and arsenic acids.

  - Reaction:

© 2026 BenchChem. All rights reserved.

- PPE Requirements: Neoprene gloves (double-gloved), face shield, and HF antidote gel (Calcium Gluconate) immediately available.

Protocol I: Electrochemical Synthesis of Graphite Intercalation Compounds (GICs)

This protocol describes the synthesis of Stage-1 Potassium-Graphite-Hexafluoroarsenate (

) using a high-voltage electrochemical cell.

Materials

- Anode (Working Electrode): Highly Oriented Pyrolytic Graphite (HOPG) or Natural Graphite composite.
- Cathode (Counter Electrode): Platinum foil or high-surface-area activated carbon (to prevent K-dendrites).
- Reference Electrode:

  metal ribbon (in glovebox) or

  (in non-aqueous solution).
- Electrolyte: 0.5 M

  in anhydrous Propylene Carbonate (PC).
  - Drying: Dry

    under vacuum at 100°C for 24h. Dry PC over 4Å molecular sieves for 48h (

    ppm).

Experimental Setup (DOT Diagram)

© 2026 BenchChem. All rights reserved.

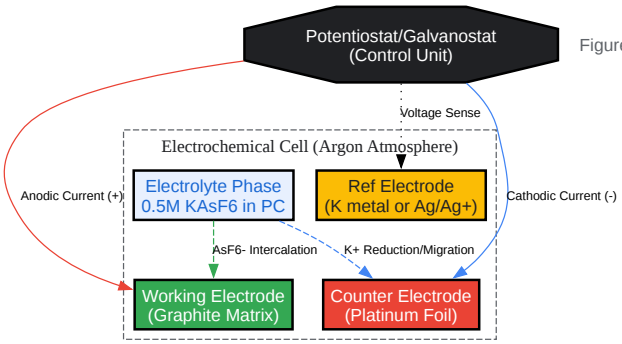

Figure 1: Three-electrode setup for the anodic intercalation of AsF6- into graphite.

Click to download full resolution via product page

Procedure

- Assembly: Assemble the cell in an Argon-filled glovebox (

  ppm).
- Conditioning: Allow the Open Circuit Potential (OCP) to stabilize for 2 hours.
- Galvanostatic Charging (Intercalation):
  - Apply a constant anodic current density of 10–20

    . Low current is crucial to allow staging equilibrium and prevent solvent co-intercalation.
  - Target Voltage: Cutoff at 5.2 V vs.

    (approx 4.9 V vs

).
- Staging Monitoring:

© 2026 BenchChem. All rights reserved.

- Monitor voltage plateaus. Stage transitions appear as distinct steps in the

  vs.

  plot.

- Stage 1 Formation: Typically occurs when the composition reaches

  .

- Workup:

  - Disconnect cell. Wash the graphite electrode with pure anhydrous DME to remove excess surface salt.

  - Dry under vacuum at room temperature. Do not heat above 60°C, as

    GICs can decompose thermally.

Protocol II: Electropolymerization of Conducting Polymers

is used to synthesize highly conductive, anion-doped Poly(p-phenylene) (PPP) or Polypyrrole (PPy). The large

anion stabilizes the delocalized positive charge on the polymer backbone.

Reaction Mechanism

The polymerization proceeds via a radical-cation mechanism. The non-nucleophilic nature of

is vital here; nucleophilic anions (like halides) would attack the radical cation, terminating the chain length prematurely.

© 2026 BenchChem. All rights reserved.

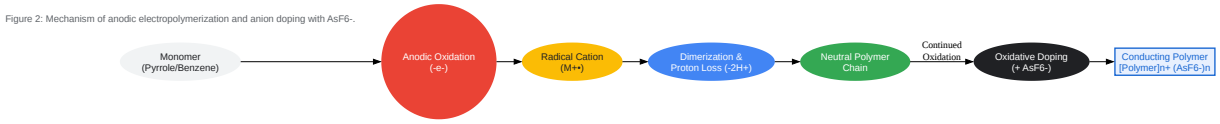

Click to download full resolution via product page

Procedure (Polypyrrole Synthesis)

- Electrolyte Prep: Dissolve 0.1 M Pyrrole monomer and 0.1 M

  in Propylene Carbonate.

  - Note: If

    dissolves slowly, sonicate for 10 minutes. Ensure the solution is clear.

- Deposition:

  - Method: Potentiostatic deposition at +0.8 V vs Ag/Ag+.

  - Substrate: ITO glass or Platinum button.

- Growth: A black conducting film will form on the anode.

- Post-Process: Rinse with acetone. The resulting film is

  , exhibiting high conductivity due to the low degree of ion pairing between the delocalized polymer charge and the diffuse

  cloud.

Troubleshooting & Optimization

© 2026 BenchChem. All rights reserved.

Issue	Probable Cause	Corrective Action
Precipitation in Cell	Saturation of or moisture ingress.	Reduce concentration to 0.3 M. Verify solvent dryness (Karl Fischer titration).
High Overpotential	Poor conductivity of electrolyte.	Add a cosolvent like DME (1:1 with PC) to lower viscosity, or use a supporting salt (if non-interfering).
Electrode Passivation	Formation of insulating or oxides.	Ensure voltage limits are respected ( ). Check for water contamination (HF formation attacks electrode).
Low Polymer Quality	Nucleophilic attack or solvent breakdown.	Switch to strictly anhydrous PC or Sulfolane. Ensure is free of impurities.

References

- Safety Data Sheet (**Potassium Hexafluoroarsenate**). Thermo Fisher Scientific. (2025).[1][2][3][4][5] Link
- Electrolyte Solubility in Organic Solvents.Royal Society of Chemistry / ACS Figshare. (2022). Detailed solubility data for K-salts in PC/DME. Link
- Graphite Intercalation Compounds.Kyoto University Research Information Repository. Mechanism of AsF6- intercalation. Link[6]
- Electrochemical Intercalation of Anions into Graphite.Journal of The Electrochemical Society. Comparison of PF6 and AsF6 intercalation voltages. Link
- Poly(p-phenylene) Synthesis.ResearchGate. Kovacic vs. Electrochemical methods. Link

© 2026 BenchChem. All rights reserved.

Disclaimer: This protocol involves hazardous materials (Arsenic, Fluorides).[1][2][3][4][7] Users must adhere to their institutional chemical hygiene plans.

Need Custom Synthesis?

BenchChem offers custom synthesis for rare earth carbides and specific isotopiclabeling.

Email: info@benchchem.com or Request Quote Online.

Sources

- 1. sigmaaldrich.cn [sigmaaldrich.cn]
- 2. fishersci.com [fishersci.com]
- 3. Potassium hexafluoroarsenate | AsF6K | CID 159810 - PubChem [pubchem.ncbi.nlm.nih.gov]
- 4. assets.thermofisher.com [assets.thermofisher.com]
- 5. researchgate.net [researchgate.net]
- 6. Kyoto University Research Information Repository [repository.kulib.kyoto-u.ac.jp]
- 7. Potassium hexafluoroarsenate - Wikipedia [en.wikipedia.org]
- To cite this document: BenchChem. [Application Note: Electrochemical Synthesis Using Potassium Hexafluoroarsenate ( )]. BenchChem, [2026]. [Online PDF]. Available at: [https://www.benchchem.com/product/b095478#electrochemical-synthesis-using-potassium-hexafluoroarsenate]

Disclaimer & Data Validity:

The information provided in this document is for Research Use Only (RUO) and is strictly not intended for diagnostic or therapeutic procedures. While BenchChem strives to provide accurate protocols, we make no warranties, express or implied, regarding the fitness of this product for every specific experimental setup.

Technical Support: The protocols provided are for reference purposes. Unsure if this reagent suits your experiment? [Contact our Ph.D. Support Team for a compatibility check]

Need Industrial/Bulk Grade? Request Custom Synthesis Quote

© 2026 BenchChem. All rights reserved.

BenchChem

Our mission is to be the trusted global source of essential and advanced chemicals, empowering scientists and researchers to drive progress in science and industry.

Contact

Address: 3281 E Guasti Rd

Ontario, CA 91761, United States

Phone: (601) 213-4426

Email: info@benchchem.com

© 2026 BenchChem. All rights reserved.