A Comparative Guide to the Biocompatibility of Copper Silicate for Medical Applications

Author: BenchChem Technical Support Team. **Date**: April 2026

Compound of Interest

Compound Name:	*Copper silicate*
CAS No.:	*16509-17-4*
Cat. No.:	*B095710*

Get Quote

For Researchers, Scientists, and Drug Development Professionals

The selection of a biomaterial for medical applications, particularly in the realm of tissue engineering and regenerative medicine, hinges on its biocompatibility and its ability to elicit the desired biological response. This guide provides a comparative analysis of **copper silicate**, a promising bioceramic, with two well-established alternatives: bioactive glass and calcium phosphate cement. The objective is to present a clear, data-driven comparison to aid in the selection of the most suitable material for specific research and development needs.

Performance Comparison: **Copper Silicate** vs. Alternatives

The biocompatibility of these materials is not a simple binary attribute but rather a spectrum of interactions with the biological environment. Key considerations include cytotoxicity, the ability to support cell growth and differentiation (osteogenesis), and the promotion of blood vessel formation (angiogenesis).

In Vitro Cytotoxicity

© 2026 BenchChem. All rights reserved.

The cytotoxic potential of a biomaterial is a critical initial screening parameter. The MTT (3-(4,5-dimethylthiazol-2-yl)-2,5-diphenyltetrazolium bromide) assay is a standard colorimetric assay used to assess cell metabolic activity, which is an indicator of cell viability.

Table 1: Comparative In Vitro Cytotoxicity of Copper-Containing Bioactive Glass

Material Composition	Copper Content (wt.%)	Cell Type	Assay Duration	Cell Viability (%)	Reference
Silicate Bioactive Glass	0	MC3T3-E1 (pre-osteoblasts)	Not Specified	~100	[1]
Silicate Bioactive Glass	0.4	MC3T3-E1 (pre-osteoblasts)	Not Specified	~100	[1]
Silicate Bioactive Glass	0.8	MC3T3-E1 (pre-osteoblasts)	Not Specified	~100	[1]
Silicate Bioactive Glass	2.0	MC3T3-E1 (pre-osteoblasts)	Not Specified	Significantly Reduced	[1]

Note: This table presents data on copper-doped bioactive glass as a proxy for **copper silicate**, due to the limited availability of direct comparative studies on **copper silicate** itself. The data indicates a dose-dependent cytotoxic effect of copper.

In Vivo Bone Regeneration

The ultimate test of a bone regenerative material is its performance in a living organism. In vivo studies typically involve implanting the material into a bone defect in an animal model and assessing the extent of new bone formation over time.

Table 2: Comparative In Vivo Bone Regeneration

© 2026 BenchChem. All rights reserved.

Material	Animal Model	Defect Site	Implantation Time	New Bone Formation (%)	Reference
Silicate-Based Composite Cement	Rabbit	Femur	Not Specified	Slower degradation, good bone contact	[2]
Bioactive Glass Particulates	Rabbit	Femur	Not Specified	Faster degradation than silicate cement	[2]
Calcium Phosphate Cement	Rabbit	Femur	Not Specified	Faster degradation than silicate cement	[2]
13-93 Bioactive Glass Scaffold	Rat	Calvarial	6 weeks	46 ± 8	[1]
13-93 Bioactive Glass + 0.4 wt.% CuO	Rat	Calvarial	6 weeks	Not significantly different from control	[1]
13-93 Bioactive Glass + 0.8 wt.% CuO	Rat	Calvarial	6 weeks	Not significantly different from control	[1]
13-93 Bioactive Glass + 2.0 wt.% CuO	Rat	Calvarial	6 weeks	0.8 ± 0.7 (significantly inhibited)	[1]

© 2026 BenchChem. All rights reserved.

Experimental Protocols

Detailed and standardized experimental protocols are crucial for the reproducibility and comparison of biocompatibility data.

MTT Assay for Cytotoxicity

This protocol outlines the general steps for assessing the in vitro cytotoxicity of a biomaterial using the MTT assay.

Objective: To determine the effect of a biomaterial on the viability of cultured cells.

Materials:

- Sterile 96-well cell culture plates
- Cell line of interest (e.g., MC3T3-E1 osteoblasts, L929 fibroblasts)
- Complete cell culture medium (e.g., DMEM with 10% FBS and 1% penicillin-streptomycin)
- Phosphate-buffered saline (PBS)
- Biomaterial extracts or material discs
- MTT solution (5 mg/mL in PBS)
- Solubilization solution (e.g., DMSO or a solution of 10% SDS in 0.01 M HCl)
- Microplate reader

Procedure:

- Cell Seeding: Seed cells into a 96-well plate at a predetermined density (e.g., 1 x 10^4 cells/well) and incubate for 24 hours to allow for cell attachment.
- Material Exposure:
  - Extract Method: Prepare extracts of the biomaterial by incubating a known surface area of the material in culture medium for a specified time (e.g., 24, 48, or 72 hours). Remove the

© 2026 BenchChem. All rights reserved.

material and apply serial dilutions of the extract to the cells.

- Direct Contact Method: Place sterile discs of the biomaterial directly onto the cell layer in each well.

- Incubation: Incubate the cells with the biomaterial extracts or discs for various time points (e.g., 24, 48, 72 hours).
- MTT Addition: After the incubation period, remove the culture medium (and material discs if applicable) and add 100 µL of fresh medium and 10 µL of MTT solution to each well.
- Formazan Formation: Incubate the plate for 2-4 hours at 37°C in a humidified atmosphere with 5% CO2. During this time, viable cells with active mitochondria will reduce the yellow MTT to purple formazan crystals.
- Solubilization: After the incubation, add 100 µL of the solubilization solution to each well to dissolve the formazan crystals.
- Absorbance Measurement: Measure the absorbance of the solution in each well using a microplate reader at a wavelength of 570 nm. A reference wavelength of 630 nm can be used to subtract background absorbance.
- Data Analysis: Calculate the percentage of cell viability for each treatment group relative to the untreated control group.

Signaling Pathways in Biocompatibility

The interaction of biomaterials with cells triggers specific intracellular signaling pathways that govern cellular responses like proliferation, differentiation, and angiogenesis.

VEGF Signaling Pathway in Angiogenesis

The Vascular Endothelial Growth Factor (VEGF) signaling pathway is a critical regulator of angiogenesis. Bioactive materials can influence this pathway by releasing ions that stimulate VEGF production.

© 2026 BenchChem. All rights reserved.

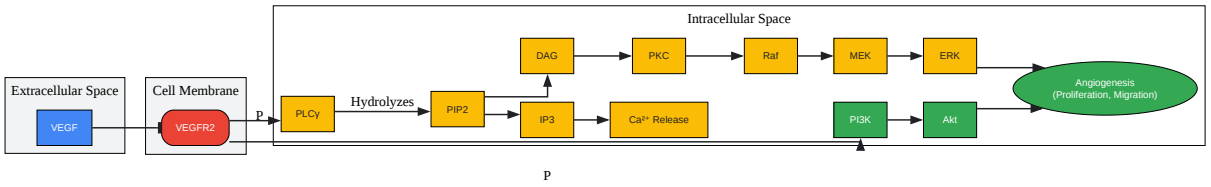

Click to download full resolution via product page

Caption: VEGF signaling pathway leading to angiogenesis.

Integrin-MAPK Signaling Pathway in Osteoblast Differentiation

The interaction between cells and the extracellular matrix, mediated by integrins, plays a crucial role in osteoblast differentiation. The Mitogen-Activated Protein Kinase (MAPK) pathway is a key downstream effector.

© 2026 BenchChem. All rights reserved.

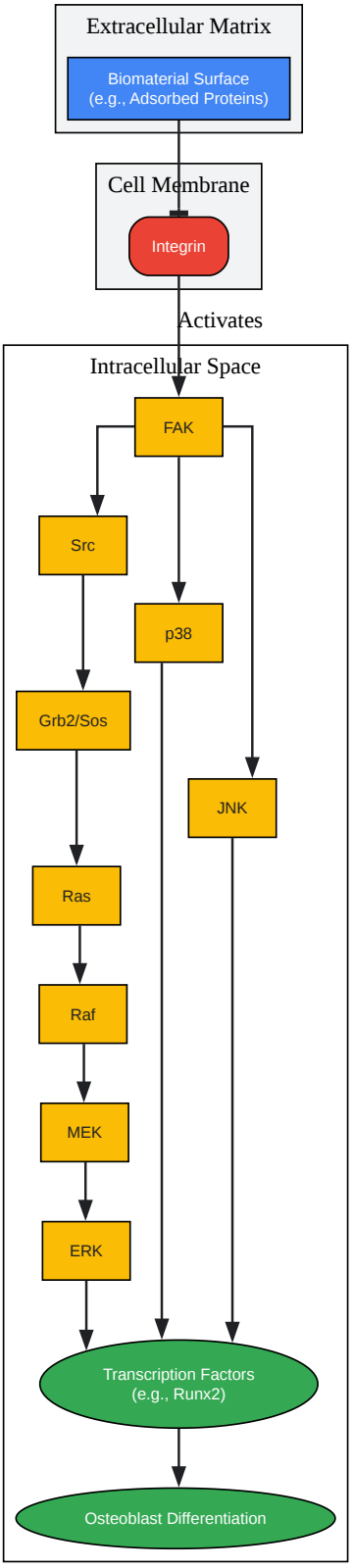

Click to download full resolution via product page

Caption: Integrin-MAPK signaling in osteoblast differentiation.

© 2026 BenchChem. All rights reserved.

Wnt/β-catenin Signaling Pathway in Bone Regeneration

The Wnt/β-catenin pathway is a fundamental signaling cascade in embryonic development and adult tissue homeostasis, including bone formation and regeneration.

© 2026 BenchChem. All rights reserved.

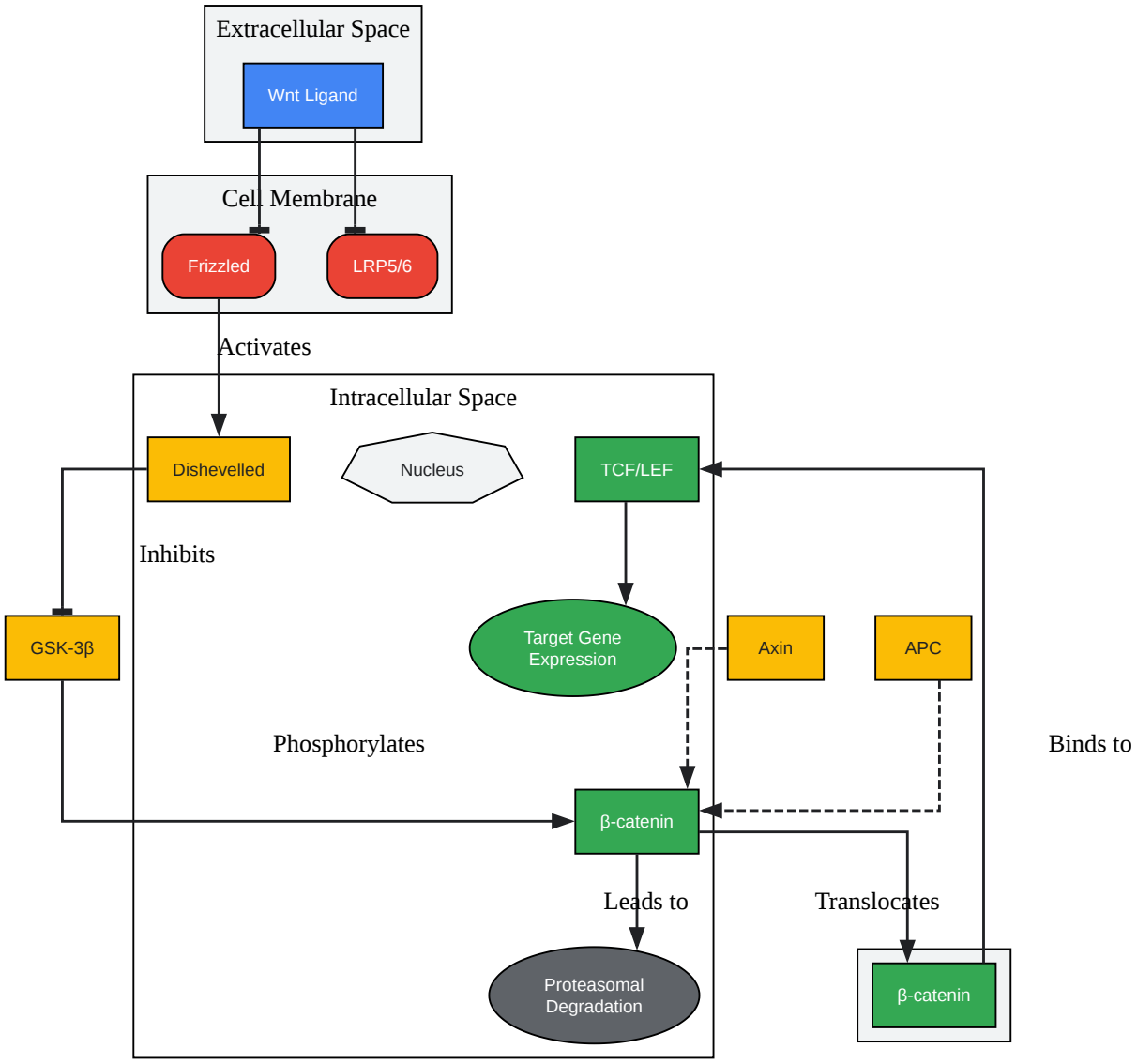

Click to download full resolution via product page

Caption: Wnt/β-catenin signaling pathway in bone regeneration.

© 2026 BenchChem. All rights reserved.

Conclusion

The choice between **copper silicate**, bioactive glass, and calcium phosphate cement for medical applications depends on the specific requirements of the intended use.

- **Copper Silicate** emerges as a biomaterial with the potential for enhanced angiogenesis and antibacterial properties, attributed to the release of copper ions. However, the concentration of copper is a critical parameter, as higher levels can lead to cytotoxicity and inhibit bone formation.[1][3] Further research is needed to establish optimal copper concentrations for various applications.

- Bioactive Glass is a well-characterized material known for its excellent bioactivity and ability to bond to bone.[2] It promotes osteogenesis and can be tailored to control degradation rates. The incorporation of therapeutic ions, such as copper, can further enhance its functionality, but as with **copper silicate**, a careful balance must be struck to avoid adverse cellular responses.

- Calcium Phosphate Cements are highly biocompatible and osteoconductive, closely mimicking the mineral phase of bone.[2] They offer the advantage of being injectable and self-setting, making them suitable for filling irregularly shaped bone defects. Their degradation rate can be controlled by adjusting their composition and crystallinity.

Ultimately, the selection process should involve a thorough evaluation of the in vitro and in vivo performance of these materials in the context of the specific clinical application. This guide provides a foundational comparison to inform this critical decision-making process.

Need Custom Synthesis?

BenchChem offers custom synthesis for rare earth carbides and specific isotopiclabeling.

Email: info@benchchem.com or Request Quote Online.

References

- 1. Effect of copper-doped silicate 13-93 bioactive glass scaffolds on the response of MC3T3-E1 cells in vitro and on bone regeneration and angiogenesis in rat calvarial defects in vivo - PubMed [pubmed.ncbi.nlm.nih.gov]

© 2026 BenchChem. All rights reserved.

- 2. researchgate.net [researchgate.net]
- 3. Copper-based biomaterials for bone and cartilage tissue engineering - PMC [pmc.ncbi.nlm.nih.gov]
- To cite this document: BenchChem. [A Comparative Guide to the Biocompatibility of Copper Silicate for Medical Applications]. BenchChem, [2026]. [Online PDF]. Available at: [https://www.benchchem.com/product/b095710/docs#a-comparative-guide-to-the-biocompatibility-of-copper-silicate-for-medical-applications]

Disclaimer & Data Validity:

The information provided in this document is for Research Use Only (RUO) and is strictly not intended for diagnostic or therapeutic procedures. While BenchChem strives to provide accurate protocols, we make no warranties, express or implied, regarding the fitness of this product for every specific experimental setup.

Technical Support: The protocols provided are for reference purposes. Unsure if this reagent suits your experiment?

Need Industrial/Bulk Grade? Request Custom Synthesis Quote

BenchChem

Our mission is to be the trusted global source of essential and advanced chemicals, empowering scientists and researchers to drive progress in science and industry.

Contact

Address: 3281 E Guasti Rd

Ontario, CA 91761, United States

Phone: (601) 213-4426

Email: info@benchchem.com

Contact our Ph.D. Support Team for a compatibility check

© 2026 BenchChem. All rights reserved.