"comparative study of different catalysts for methyl vinyl ether polymerization"

Author: BenchChem Technical Support Team. **Date**: May 2026

Compound of Interest

Compound Name:	*Methyl vinyl ether*
CAS No.:	*107-25-5*
Cat. No.:	*B094198*

Get Quote

A Comparative Guide to Catalysts for Methyl Vinyl Ether Polymerization

For researchers and professionals in polymer chemistry and materials science, the controlled polymerization of **methyl vinyl ether** (MVE) is a critical process for synthesizing a range of functional polymers, including adhesives, coatings, and drug delivery vehicles. The choice of catalyst is paramount, directly influencing the polymer's molecular weight, architecture, and stereochemistry. This guide provides an in-depth comparative analysis of different catalyst systems for MVE polymerization, supported by experimental data and detailed protocols to aid in catalyst selection and experimental design.

Introduction to **Methyl Vinyl Ether** Polymerization

Methyl vinyl ether is a highly reactive monomer that readily undergoes cationic polymerization. The key to successful MVE polymerization lies in controlling the highly active carbocationic propagating species to prevent side reactions like chain transfer and termination. The advent of living/controlled cationic polymerization techniques has enabled the synthesis of

© 2026 BenchChem. All rights reserved.

well-defined poly(**methyl vinyl ether**) (PMVE) with predictable molecular weights and narrow molecular weight distributions (polydispersity index, PDI or Đ).

This guide will explore and compare three major classes of catalysts: Lewis acids, organocatalysts, and photocatalysts, focusing on their mechanisms, performance, and operational considerations.

I. Lewis Acid-Based Catalyst Systems

Lewis acids are the most traditional and widely used catalysts for MVE polymerization. They function by activating an initiator (e.g., a proton source or a carbocation precursor) to generate the initial carbocationic species that propagates the polymerization.

Mechanism of Lewis Acid Catalysis

The general mechanism involves the coordination of the Lewis acid to an initiator, which then generates a carbocation. This carbocation adds to the MVE monomer, and the resulting propagating species is stabilized by the counter-ion derived from the Lewis acid complex.

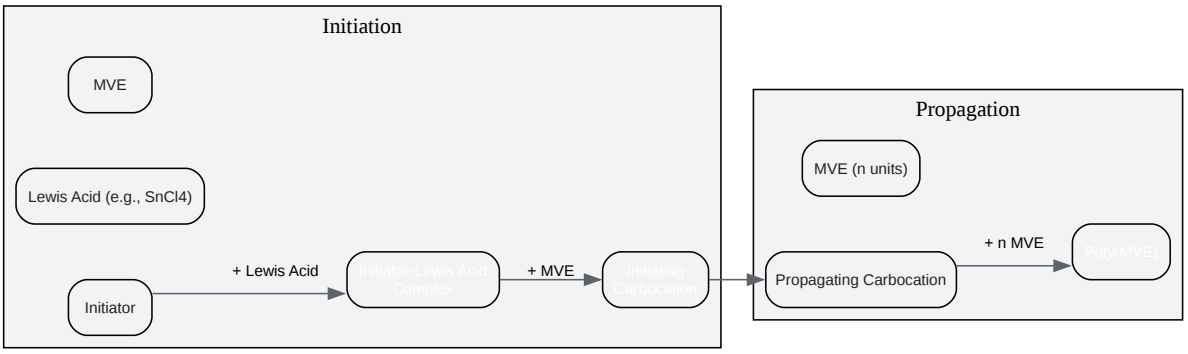

Click to download full resolution via product page

Caption: Generalized mechanism of Lewis acid-catalyzed MVE polymerization.

© 2026 BenchChem. All rights reserved.

Performance Comparison of Common Lewis Acids

Different Lewis acids exhibit varying activities and abilities to control the polymerization. The choice of Lewis acid, in combination with the initiator and reaction conditions, is crucial for achieving a living polymerization.

Catalyst System	Initiator	Solvent	Temp. (°C)	M_n (g/mol)	PDI (M_w/M_n)	Isotacticity (%)	Reference
$SnCl_4$	IBEA/$Et_{1.5}AlCl_{1.5}$	Toluene	-78	12,900	1.22	-	[1][2]
$TiCl_4$	IBEA-HCl	Toluene	-78	-	< 1.1	High	[3]
$BF_3{\cdot}OEt_2$	-	Toluene	-78	-	-	High	[3][4]
$FeCl_3$	IBEA-HCl	Toluene	-30	-	< 1.1	-	[5][6]
$EtAlCl_2$	IBEA-HCl	Toluene	-78	-	Broad	-	[5]

Note: "-" indicates data not specified in the cited sources under comparable conditions.

Key Insights:

- Tin(IV) chloride ($SnCl_4$) is a versatile Lewis acid that, when used in conjunction with a cationogen like 1-(isobutoxy)ethyl acetate (IBEA) and an activator like ethylaluminum sesquichloride ($Et_{1.5}AlCl_{1.5}$), can achieve living cationic polymerization of vinyl ethers, leading to polymers with narrow molecular weight distributions.[1][2][7]
- Titanium(IV) chloride ($TiCl_4$), particularly with bulky ligands, can induce highly isotactic polymerization of vinyl ethers, especially at low temperatures.[3]
- Boron trifluoride etherate ($BF_3{\cdot}OEt_2$) is a strong Lewis acid that can also promote stereoregular polymerization at low temperatures.[3][4][8]
- Iron(III) chloride ($FeCl_3$) has been shown to be a highly efficient catalyst for the rapid and controlled living cationic polymerization of isobutyl vinyl ether.[6]

© 2026 BenchChem. All rights reserved.

- Ethylaluminum dichloride ($EtAlCl_2$) tends to be a very active Lewis acid, which can lead to uncontrolled polymerization and broader molecular weight distributions if not carefully controlled.[5]

II. Organocatalyst Systems

In recent years, metal-free organocatalysts have emerged as a powerful alternative to Lewis acids, offering advantages in terms of reduced metal contamination and the potential for high stereocontrol.[3][4]

Mechanism of Organocatalysis

Chiral Brønsted acids, such as BINOL-derived phosphoric acids or N-triflylphosphoramides, can protonate the vinyl ether monomer to generate a carbocationic propagating species. The chiral counterion remains closely associated with the propagating chain end, influencing the stereochemistry of monomer addition.

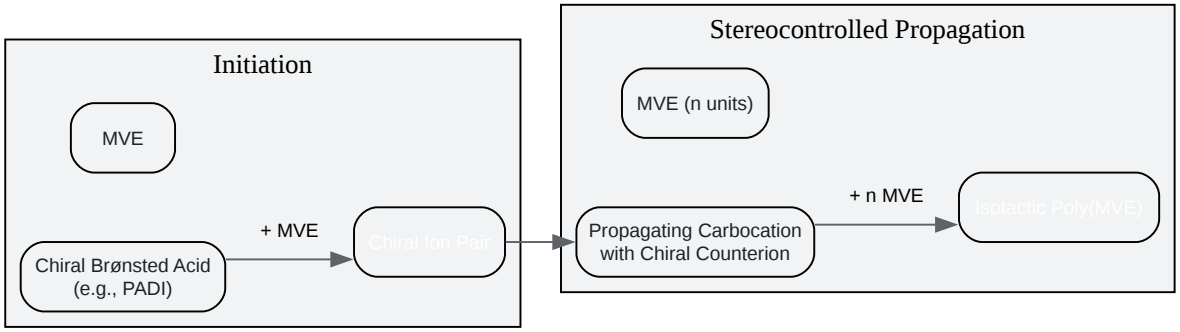

Click to download full resolution via product page

Caption: Stereoselective MVE polymerization using a chiral organocatalyst.

Performance of Representative Organocatalysts

Organocatalysts have demonstrated remarkable success in achieving highly stereoselective polymerizations.

© 2026 BenchChem. All rights reserved.

Catalyst	Chain Transfer Agent	Solvent	Temp. (°C)	M_n (g/mol)	PDI (M_w/M_n)	Isotacticity (%)	Reference
PADI	Trithiocarbonate	Toluene	-78	25,000-106,000	~1.1	up to 93	[9][10]
Chiral Phosphoric Acids/$TiCl_4$	-	Hexane/ Toluene	-78	-	-	High	[9]

PADI: 1,1′-bi-2-naphthol-derived N,N′-bis(triflyl)phosphoramidimidates

Key Insights:

- Chiral organocatalysts, such as PADIs, can facilitate highly stereoselective cationic RAFT polymerization of vinyl ethers, yielding isotactic polymers with controlled molecular weights and narrow PDIs.[10]
- The combination of chiral phosphoric acids with a Lewis acid like $TiCl_4$ can also achieve high levels of stereocontrol.[9] This highlights a synergistic approach combining elements of both catalyst classes.
- The use of a chain-transfer agent, as in RAFT polymerization, is crucial for achieving living characteristics with some organocatalytic systems.[10]

III. Photocatalyst Systems

Photocatalysis offers temporal control over the polymerization process, allowing the reaction to be started and stopped with light. This is particularly advantageous for creating complex polymer architectures.

Mechanism of Photocatalysis

Visible-light photocatalysts, such as certain organic dyes or metal complexes, can be excited by light to a state where they can activate a chain-transfer agent or an initiator, generating the

© 2026 BenchChem. All rights reserved.

cationic species that initiates polymerization. The polymerization proceeds as long as the light source is on.

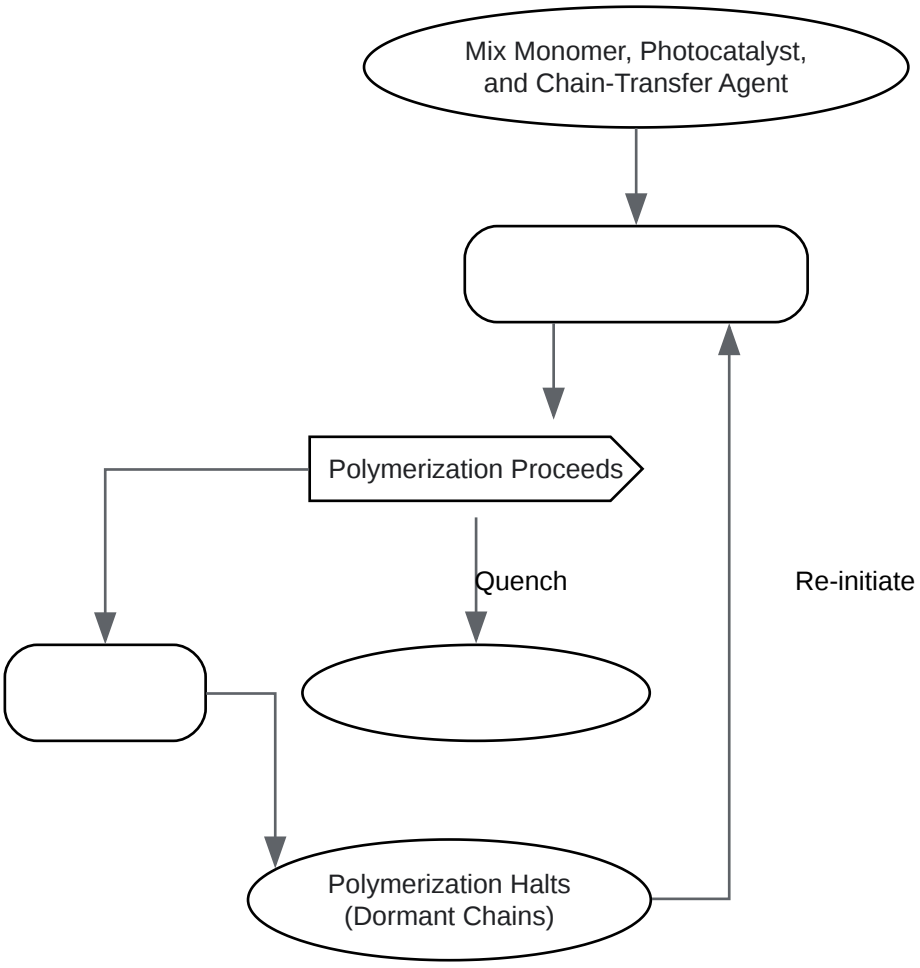

Click to download full resolution via product page

Need Custom Synthesis?

BenchChem offers custom synthesis for rare earth carbides and specific isotopiclabeling.

Email: info@benchchem.com or Request Quote Online.

Sources

- 1. Living Cationic Polymerization of Silyl-Protected β-Methyl Vinyl Ethers (Propenyl Ethers): Synthesis of Hydroxy-Functional Polymers with High Tg and LCST-Type Thermoresponse [mdpi.com]

© 2026 BenchChem. All rights reserved.

- 2. pdfs.semanticscholar.org [pdfs.semanticscholar.org]
- 3. pubs.acs.org [pubs.acs.org]
- 4. Recent Developments on Cationic Polymerization of Vinyl Ethers - PMC [pmc.ncbi.nlm.nih.gov]
- 5. main.spsj.or.jp [main.spsj.or.jp]
- 6. discovery.researcher.life [discovery.researcher.life]
- 7. Living cationic polymerization of α-methyl vinyl ethers using SnCl4 | Semantic Scholar [semanticscholar.org]
- 8. Polymerization of Vinyl Methyl Ether [jstage.jst.go.jp]
- 9. Cationic polymerization of vinyl ethers using trifluoromethyl sulfonate/solvent/ligand to access well-controlled poly(vinyl ether)s - PMC [pmc.ncbi.nlm.nih.gov]
- 10. pubs.acs.org [pubs.acs.org]

- To cite this document: BenchChem. ["comparative study of different catalysts for methyl vinyl ether polymerization"]. BenchChem, [2026]. [Online PDF]. Available at: [https://www.benchchem.com/product/b094198/docs#comparative-study-of-different-catalysts-for-methyl-vinyl-ether-polymerization]

Disclaimer & Data Validity:

The information provided in this document is for Research Use Only (RUO) and is strictly not intended for diagnostic or therapeutic procedures. While BenchChem strives to provide accurate protocols, we make no warranties, express or implied, regarding the fitness of this product for every specific experimental setup.

Technical Support: The protocols provided are for reference purposes. Unsure if this reagent suits your experiment?

Need Industrial/Bulk Grade? Request Custom Synthesis Quote

© 2026 BenchChem. All rights reserved.

BenchChem

Our mission is to be the trusted global source of essential and advanced chemicals, empowering scientists and researchers to drive progress in science and industry.

Contact

Address: 3281 E Guasti Rd

Ontario, CA 91761, United States

Phone: (601) 213-4426

Email: info@benchchem.com

Contact our Ph.D. Support Team for a compatibility check

© 2026 BenchChem. All rights reserved.