In-Depth Technical Guide: Diethyl(trimethylsilylmethyl)phosphonate

Author: BenchChem Technical Support Team. **Date**: May 2026

Compound of Interest	
Compound Name:	*Diethyl(trimethylsilylmethyl)phosphonate*
CAS No.:	*14467-94-8*
Cat. No.:	*B088555*

Get Quote

Executive Summary

Diethyl(trimethylsilylmethyl)phosphonate (CAS 14467-94-8) is a bifunctional reagent integrating a phosphonate ester and a trimethylsilyl group on a single methylene carbon.[1] This unique molecular architecture allows it to function as a hybrid reagent for both Horner-Wadsworth-Emmons (HWE) and Peterson olefination pathways. It is extensively utilized in the synthesis of vinyl phosphonates, dienes, and complex natural product intermediates where stereochemical control and chemoselectivity are paramount.

Part 1: Physiochemical Profile

The following data characterizes the pure compound. Researchers should verify specific batch data from their Certificate of Analysis (CoA).

© 2026 BenchChem. All rights reserved.

Property	Value / Description
IUPAC Name	Diethyl (trimethylsilyl)methylphosphonate
CAS Number	14467-94-8
Molecular Formula	$C_8H_{21}O_3PSi$
Molecular Weight	224.31 g/mol
Appearance	Clear, colorless to pale yellow liquid
Boiling Point	108–110 °C at 12 mmHg (Lit.)
Density	0.998 g/mL at 25 °C
Refractive Index ( )	1.4320
Solubility	Soluble in $CHCl_3$, THF, Et_2O, Toluene; Decomposes in water
Flash Point	> 90 °C (Closed Cup)

Part 2: Molecular Architecture & Spectroscopy

The structural validation of this reagent relies on Nuclear Magnetic Resonance (NMR) spectroscopy.[2] The presence of both Phosphorus-31 and Silicon-29 nuclei introduces specific coupling patterns in the Proton-1 spectrum.

Structural Characterization Data[1][2][4][5]

- ^1H NMR (400 MHz, $CDCl_3$):
  - 4.08 (m, 4H, P-O-CH_2CH_3)
  - 1.32 (t, J = 7.1 Hz, 6H, P-O-CH_2CH_3)
  - 1.15 (d, J = 20.5 Hz, 2H, P-CH_2-Si)

© 2026 BenchChem. All rights reserved.

- 0.15 (s, 9H, $Si(CH_3)_3$)
- Note: The doublet at 1.15 ppm is characteristic of the methylene protons coupled to the phosphorus nucleus.

- ^{31}P NMR (162 MHz, $CDCl_3$):
  - 28.5 ppm (Singlet, relative to H_3PO_4)
- ^{13}C NMR (100 MHz, $CDCl_3$):
  - 61.5 (d, J = 6.0 Hz, $O-CH_2$), 16.5 (d, J = 6.0 Hz, CH_3), 14.2 (d, J = 130 Hz, $P-CH_2-Si$), -0.5 (s, $Si(CH_3)_3$).

Molecular Visualization

The following diagram illustrates the connectivity and key functional regions of the molecule.

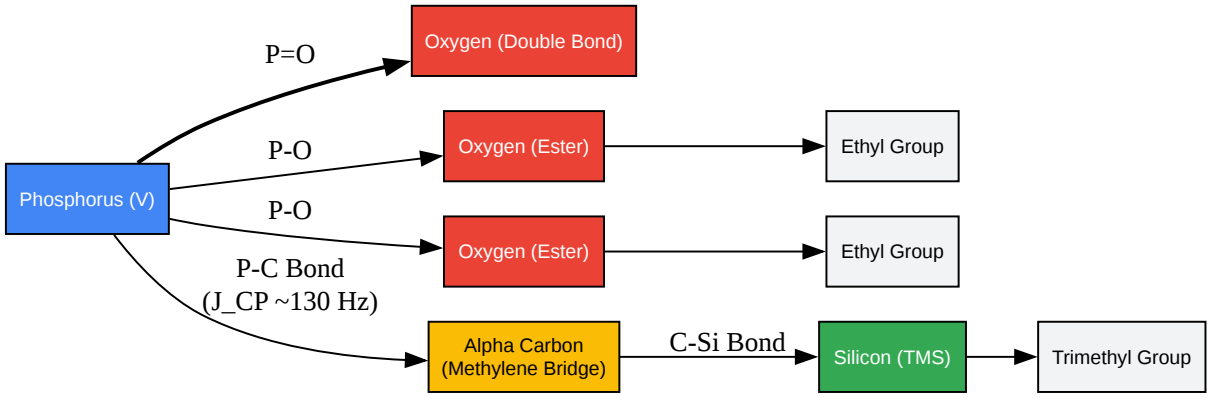

Click to download full resolution via product page

Caption: Connectivity map of **Diethyl(trimethylsilylmethyl)phosphonate** highlighting the P-C-Si linkage critical for its dual reactivity.

© 2026 BenchChem. All rights reserved.

Part 3: Reactivity & Stability

Mechanism of Action

The reagent's utility stems from the acidity of the

-methylene protons, which are flanked by two electron-withdrawing groups (Phosphonate and Silyl). Upon deprotonation, the resulting carbanion can react with carbonyls (aldehydes/ketones).

- HWE Pathway: Typically favored when the silyl group is retained or if the conditions favor phosphate elimination.
- Peterson Olefination: Favored under conditions where the silyl group is eliminated (often leading to vinyl phosphonates if the P-group is retained, or non-phosphorus alkenes if the P-group is eliminated, though this reagent is specifically designed to retain the phosphorus moiety for synthesizing vinyl phosphonates).

Stability Protocols

- Moisture Sensitivity: The P-C bond is stable, but the ester groups are susceptible to hydrolysis under acidic/basic aqueous conditions.
- Storage: Store under an inert atmosphere (Argon/Nitrogen) at room temperature. Avoid prolonged exposure to air to prevent hydrolysis of the ethoxy groups.

Part 4: Applied Methodologies

Protocol A: Synthesis via Michaelis-Arbuzov Reaction

This is the industry-standard method for synthesizing **Diethyl(trimethylsilylmethyl)phosphonate**.

Reagents:

- Triethyl phosphite (

)
- (Chloromethyl)trimethylsilane (

)

Workflow:

- Setup: Equip a round-bottom flask with a magnetic stir bar, a reflux condenser, and an inert gas inlet (Argon).
- Addition: Add (Chloromethyl)trimethylsilane (1.0 equiv) and Triethyl phosphite (1.2 equiv) to the flask.
- Reaction: Heat the mixture to 150–160 °C (neat). Ethyl chloride (

) gas will evolve as a byproduct.
  - Critical Control Point: Ensure efficient venting of

    to prevent pressure buildup.
- Monitoring: Monitor by ^{31}P NMR. The starting material signal (

  ~140 ppm) should disappear, replaced by the product signal (

  ~28.5 ppm).
- Purification: Distill the crude mixture under reduced pressure (vacuum distillation). Collect the fraction boiling at ~108–110 °C / 12 mmHg.

© 2026 BenchChem. All rights reserved.

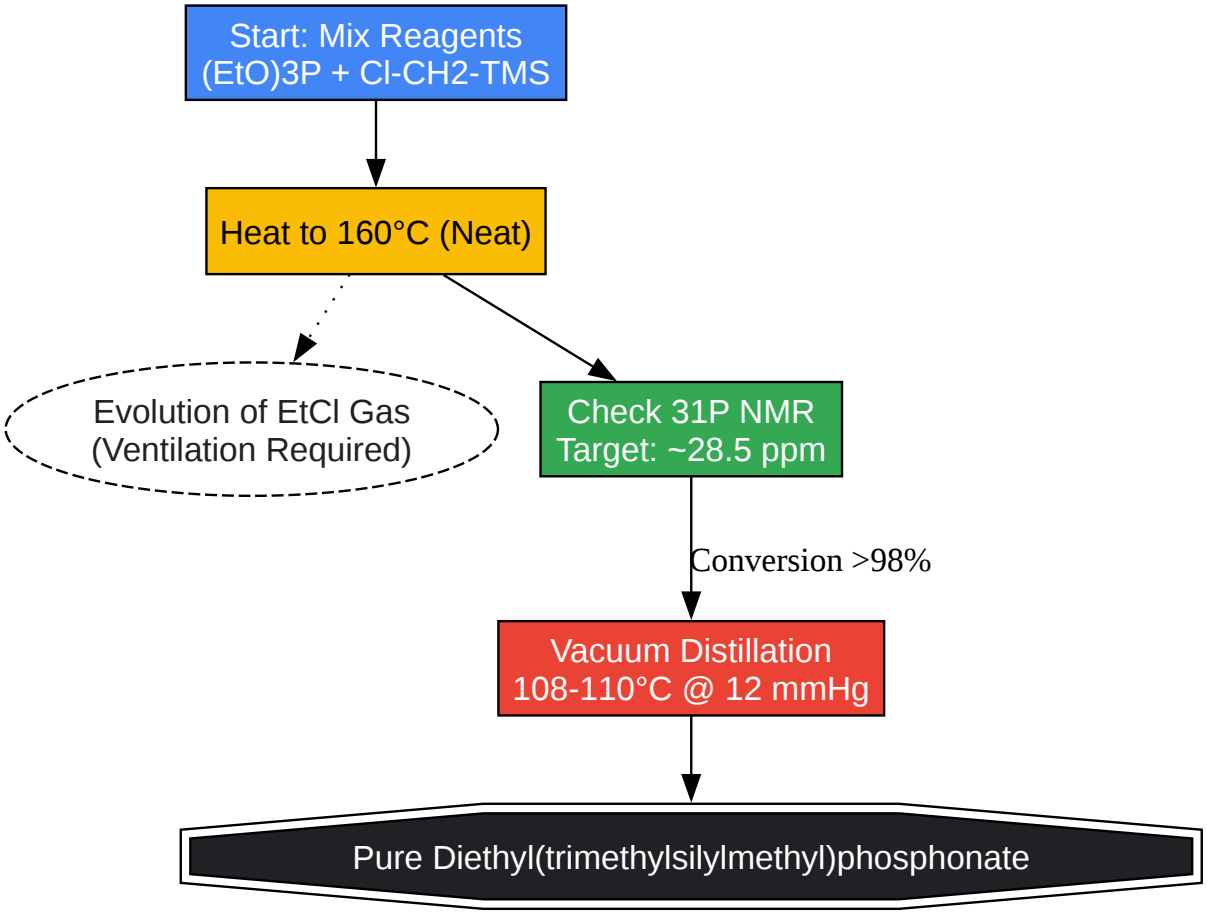

Click to download full resolution via product page

Caption: Step-by-step workflow for the Michaelis-Arbuzov synthesis of the target reagent.

Protocol B: Application in Vinyl Phosphonate Synthesis

This reagent is classically used to convert aldehydes into vinyl phosphonates (e.g.,

).

- Deprotonation: Dissolve the phosphonate (1.0 equiv) in dry THF at -78 °C. Add

  -BuLi (1.05 equiv) dropwise. Stir for 30 min.

- Addition: Add the aldehyde (R-CHO, 1.0 equiv) slowly.

© 2026 BenchChem. All rights reserved.

- Elimination: Allow the mixture to warm to room temperature. The Peterson-type elimination of the silanolate species occurs, yielding the vinyl phosphonate.
- Workup: Quench with saturated

  , extract with ethyl acetate, and purify via silica gel chromatography.

Part 5: Safety & Handling (SDS Summary)

Hazard Class	Classification	Precautionary Measures
Skin Irritation	Category 2 (H315)	Wear nitrile gloves. Wash thoroughly after handling.
Eye Irritation	Category 2A (H319)	Use safety goggles. If in eyes: Rinse cautiously with water for 15 min.
Inhalation	STOT SE 3 (H335)	Use in a fume hood. Avoid breathing vapors/mist.

Disposal: Incinerate in a chemical incinerator equipped with an afterburner and scrubber. Phosphorus oxides are formed upon combustion.[3]

References

- Arbuzov Reaction Mechanism & Scope
  - Bhattacharya, A. K., & Thyagarajan, G. (1981). The Michaelis-Arbuzov rearrangement.[4] Chemical Reviews, 81(4), 415-430.
- Synthesis of Silyl-Phosphonates
  - Chakraborty, T. K., et al. (2002). Alpha-Silylphosphonates in Organic Synthesis. Synlett.
- Peterson Olefination Applications
  - Ager, D. J. (1984). The Peterson Reaction. Organic Reactions.[5]
- Physical Properties Verification

© 2026 BenchChem. All rights reserved.

- PubChem Database.[5][6][7] Compound Summary for CID 12494388 (Related TMS-Phosphate) and derivatives.

Need Custom Synthesis?

BenchChem offers custom synthesis for rare earth carbides and specific isotopiclabeling.

Email: info@benchchem.com or Request Quote Online.

Sources

- 1. CAS#:62999-70-6 | DIETHYL [BIS(METHYLTHIO)METHYL]PHOSPHONATE | Chemsrc [chemsrc.com]
- 2. Diethyl difluoro(trimethylsilyl)methyl phosphonate = 85.0 H-NMR 80077-72-1 [sigmaaldrich.com]
- 3. datasheets.scbt.com [datasheets.scbt.com]
- 4. d-nb.info [d-nb.info]
- 5. ジエチルホスホノ酢酸 95% | Sigma-Aldrich [sigmaaldrich.com]
- 6. Diethyl [(trimethoxysilyl)methyl]phosphonate | C8H21O6PSi | CID 71417194 - PubChem [pubchem.ncbi.nlm.nih.gov]
- 7. Diethyl trimethylsilyl phosphate | C7H19O4PSi | CID 12494388 - PubChem [pubchem.ncbi.nlm.nih.gov]
- To cite this document: BenchChem. [In-Depth Technical Guide: Diethyl(trimethylsilylmethyl)phosphonate]. BenchChem, [2026]. [Online PDF]. Available at: [https://www.benchchem.com/product/b088555/docs#in-depth-technical-guide-diethyl-trimethylsilylmethyl-phosphonate]

Disclaimer & Data Validity:

The information provided in this document is for Research Use Only (RUO) and is strictly not intended for diagnostic or therapeutic procedures. While BenchChem strives to provide accurate protocols, we make no warranties, express or implied, regarding the fitness of this product for every specific experimental setup.

Technical Support: The protocols provided are for reference purposes. Unsure if this reagent suits your experiment?

Need Industrial/Bulk Grade? Request Custom Synthesis Quote

BenchChem

Our mission is to be the trusted global source of essential and advanced chemicals, empowering scientists and researchers to drive progress in science and industry.

Contact

Address: 3281 E Guasti Rd

Ontario, CA 91761, United States

Phone: (601) 213-4426

Email: info@benchchem.com

Contact our Ph.D. Support Team for a compatibility check

© 2026 BenchChem. All rights reserved.