A Comparative Guide to Quantitative Proteomic Labeling Strategies

Author: BenchChem Technical Support Team. **Date**: December 2025

Compound of Interest		
Compound Name:	*Samarium nitrate*	
Cat. No.:	*B8786649*	*Get Quote*

For researchers, scientists, and drug development professionals navigating the complexities of quantitative proteomics, selecting the appropriate labeling strategy is a critical decision that directly impacts experimental outcomes. While direct isotopic labeling with **samarium nitrate** is not a conventional method in quantitative proteomics, the underlying principle of using unique isotopic signatures for quantification is the foundation of several powerful techniques. Furthermore, lanthanides, including samarium, play a key role in advanced multiplexing techniques such as mass cytometry.

This guide provides an objective comparison of the leading isotopic and isobaric labeling methods: Stable Isotope Labeling by Amino Acids in Cell Culture (SILAC), Isobaric Tags for Relative and Absolute Quantitation (iTRAQ), and Tandem Mass Tags (TMT). Additionally, it introduces Metal-Coded Affinity Tags (MeCAT) as an alternative strategy that leverages metal ions for absolute quantification.

Comparison of Quantitative Proteomic Labeling Techniques

The choice of a labeling strategy depends on various factors, including the sample type, desired level of multiplexing, and the specific research question. The following table summarizes the key performance metrics of the most common labeling techniques.

© 2025 BenchChem. All rights reserved.

Feature	SILAC (Stable Isotope Labeling by Amino Acids in Cell Culture)	iTRAQ (Isobaric Tags for Relative and Absolute Quantitation)	TMT (Tandem Mass Tags)	MeCAT (Metal-Coded Affinity Tags)
Principle	In vivo metabolic labeling with "heavy" amino acids.	In vitro chemical labeling of peptides with isobaric tags.	In vitro chemical labeling of peptides with isobaric tags.	In vitro chemical labeling of proteins or peptides with lanthanide-chelating tags.
Labeling Stage	During protein synthesis in live cells.	Post-protein digestion, at the peptide level.	Post-protein digestion, at the peptide level.	Pre- or post-protein digestion.
Quantification	MS1 level, based on the intensity ratio of heavy to light peptide pairs.	MS2 or MS3 level, based on reporter ion intensities.	MS2 or MS3 level, based on reporter ion intensities.	Inductively Coupled Plasma-Mass Spectrometry (ICP-MS) based on metal signal.
Multiplexing	Typically 2-plex or 3-plex.	4-plex or 8-plex.	Up to 18-plex (TMTpro).	High potential, depending on the number of available lanthanide isotopes.[1]
Accuracy	High, as samples are mixed early in the workflow, minimizing experimental variability.[2][3]	Good, but can be affected by ratio compression.[4]	Good, but can be affected by ratio compression, though MS3 methods can mitigate this.[2]	High, enables absolute quantification.[5]
Precision	High.[6]	Good.	Good.	High.[1]

© 2025 BenchChem. All rights reserved.

Sensitivity	High, especially for in-cell studies.[2]	High.[4]	High, with recent advancements further boosting sensitivity.[7]	Extremely high (attomole to zeptomole range).[4]
Dynamic Range	Good.[6]	Wide, but can be limited by ratio compression.	Wide, and can be extended with advanced MS techniques.[8]	Very wide (at least 10^9).[9]
Sample Type	Primarily cell culture.[4]	Tissues, biofluids, cell lysates.[4]	Tissues, biofluids, cell lysates.[4]	Purified proteins, complex protein mixtures.[5]

Experimental Protocols

Detailed and standardized protocols are crucial for reproducible and reliable quantitative proteomic experiments. Below are summaries of the experimental workflows for SILAC, iTRAQ, TMT, and MeCAT.

Experimental Workflow: A Comparative Overview

The following diagram illustrates the general workflows for the discussed labeling strategies, highlighting the key differences in their experimental pipelines.

© 2025 BenchChem. All rights reserved.

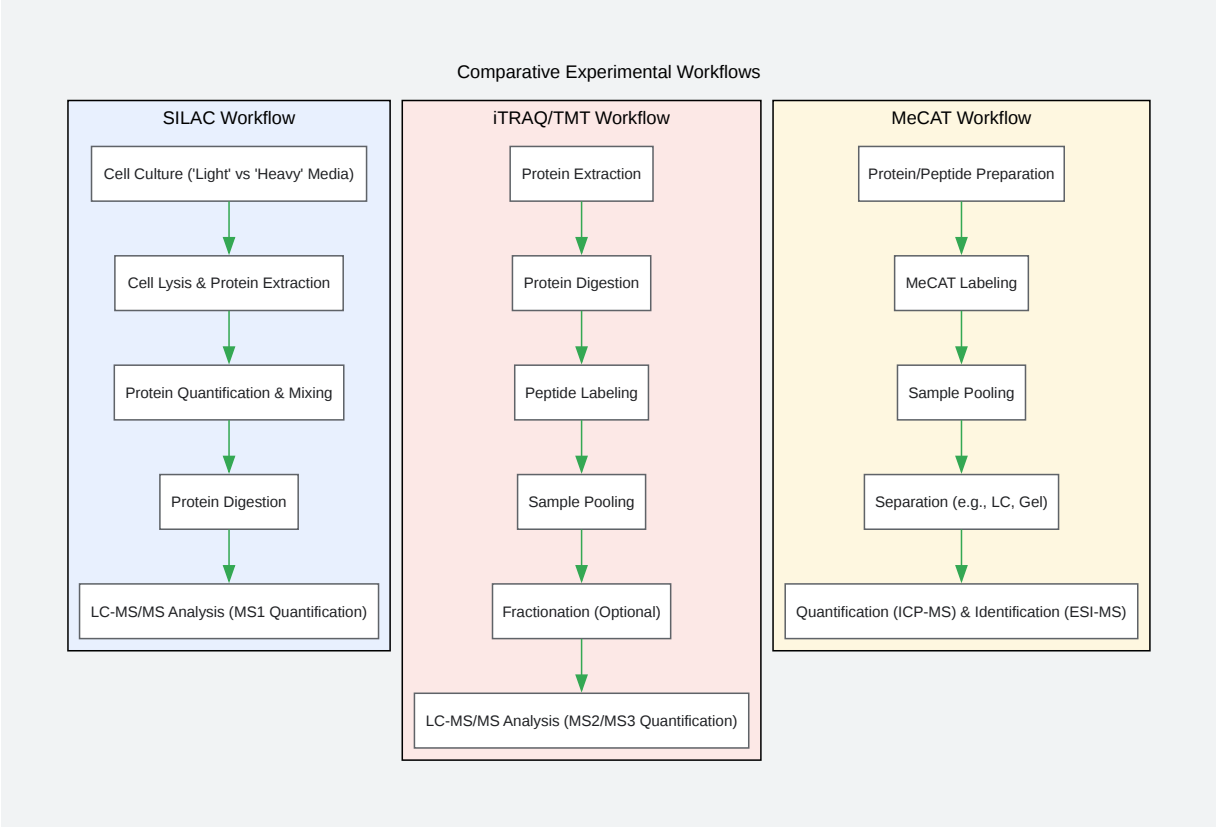

Click to download full resolution via product page

Caption: Comparative workflows of SILAC, iTRAQ/TMT, and MeCAT labeling techniques.

Detailed Protocol: SILAC

© 2025 BenchChem. All rights reserved.

Stable Isotope Labeling by Amino Acids in Cell Culture (SILAC) is a metabolic labeling approach where cells are cultured in media containing either normal ("light") or heavy isotope-labeled essential amino acids (e.g., $^{13}C_6$-Arginine, $^{13}C_6{}^{15}N_2$-Lysine).[10]

- Cell Culture and Labeling: Two populations of cells are cultured in parallel. One in "light" SILAC medium and the other in "heavy" SILAC medium for at least five to six cell divisions to ensure complete incorporation of the labeled amino acids.[10]
- Cell Lysis and Protein Extraction: The "light" and "heavy" cell populations are harvested separately, and proteins are extracted using a suitable lysis buffer containing protease and phosphatase inhibitors.[10]
- Protein Quantification and Mixing: Protein concentrations of the "light" and "heavy" lysates are determined. Equal amounts of protein from each lysate are then mixed.
- Protein Digestion: The combined protein mixture is subjected to enzymatic digestion, typically with trypsin, to generate peptides.[11]
- LC-MS/MS Analysis: The resulting peptide mixture is analyzed by liquid chromatography-tandem mass spectrometry (LC-MS/MS). Quantification is performed at the MS1 level by comparing the signal intensities of the "light" and "heavy" peptide pairs.[11]

Detailed Protocol: iTRAQ

Isobaric Tags for Relative and Absolute Quantitation (iTRAQ) is a chemical labeling method that uses isobaric tags to label the primary amines of peptides.

- Protein Extraction and Digestion: Proteins are extracted from up to eight different samples. Equal amounts of protein from each sample are then digested into peptides using trypsin.[12]
- iTRAQ Labeling: Each peptide digest is individually labeled with a specific iTRAQ reagent (e.g., 114, 115, 116, 117 for a 4-plex experiment).[12] The reaction is typically carried out for 1-2 hours at room temperature.[10]
- Sample Pooling: The iTRAQ-labeled peptide samples are then combined into a single mixture.[13]

© 2025 BenchChem. All rights reserved.

- Fractionation (Optional): To reduce sample complexity and increase proteome coverage, the pooled peptide mixture can be fractionated using techniques like strong cation exchange (SCX) or high-pH reversed-phase chromatography.
- LC-MS/MS Analysis: The sample (or each fraction) is analyzed by LC-MS/MS. During fragmentation (MS2), the isobaric tags release reporter ions of different masses, and the relative protein abundance is determined by the intensities of these reporter ions.[14]

Detailed Protocol: TMT

Tandem Mass Tags (TMT) are another set of isobaric chemical tags that function similarly to iTRAQ but offer higher multiplexing capabilities.

- Protein Extraction and Digestion: Similar to the iTRAQ workflow, proteins are extracted from up to 18 samples, and equal amounts are digested into peptides.[7]
- TMT Labeling: Each peptide sample is labeled with a unique TMT reagent. The labeling reaction is typically performed for one hour at room temperature.[6][8]
- Sample Pooling: All TMT-labeled samples are combined into a single mixture.
- Fractionation (Optional): The pooled sample is often fractionated to increase the depth of analysis.[7]
- LC-MS/MS Analysis: The labeled peptide mixture is analyzed by LC-MS/MS. Quantification is based on the reporter ions generated during MS2 or, for higher accuracy, MS3 fragmentation.

Detailed Protocol: MeCAT

Metal-Coded Affinity Tags (MeCAT) utilize lanthanide-chelating tags for absolute protein quantification.

- Protein/Peptide Preparation: Proteins or peptides are extracted and purified from the samples.
- MeCAT Labeling: The samples are labeled with different MeCAT reagents, each containing a unique lanthanide ion. The labeling can target specific functional groups, such as cysteine

© 2025 BenchChem. All rights reserved.

residues.[5]

- Sample Pooling: The differently labeled samples are mixed together.
- Separation: The labeled proteins or peptides are separated using methods like 2D gel electrophoresis or liquid chromatography.[1]
- Quantification and Identification: The absolute quantity of each protein or peptide is determined by detecting the lanthanide signal using Inductively Coupled Plasma-Mass Spectrometry (ICP-MS). Identification is performed in parallel using electrospray ionization-mass spectrometry (ESI-MS).[4][9]

Application in Signaling Pathway Analysis

Quantitative proteomics is a powerful tool for elucidating the dynamics of cellular signaling pathways. For instance, the epidermal growth factor receptor (EGFR) signaling pathway, which is crucial in cell proliferation and is often dysregulated in cancer, can be studied using these labeling techniques to quantify changes in protein expression and phosphorylation upon stimulation or drug treatment.

Generic Kinase Signaling Pathway

The following diagram illustrates a generic kinase signaling pathway that can be investigated using quantitative proteomics.

© 2025 BenchChem. All rights reserved.

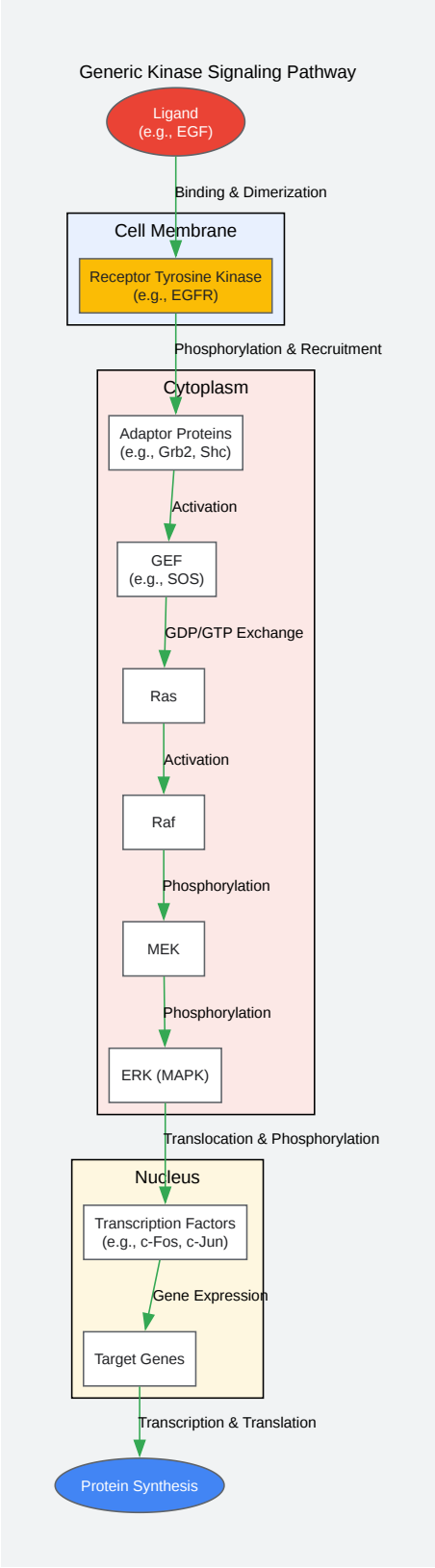

Click to download full resolution via product page

Caption: A generic kinase signaling cascade, such as the EGFR-MAPK pathway.

© 2025 BenchChem. All rights reserved.

Need Custom Synthesis?

BenchChem offers custom synthesis for rare earth carbides and specific isotopiclabeling.

Email: info@benchchem.com or Request Quote Online.

References

- 1. Comparing iTRAQ, TMT and SILAC | Silantes [silantes.com]
- 2. Advantages and Disadvantages of iTRAQ, TMT, and SILAC in Protein Quantification | MtoZ Biolabs [mtoz-biolabs.com]
- 3. bioengineer.org [bioengineer.org]
- 4. Label-based Proteomics: iTRAQ, TMT, SILAC Explained - MetwareBio [metwarebio.com]
- 5. Application of metal-coded affinity tags (MeCAT): absolute protein quantification with top-down and bottom-up workflows by metal-coded tagging - PubMed [pubmed.ncbi.nlm.nih.gov]
- 6. pubs.acs.org [pubs.acs.org]
- 7. Boosting the Sensitivity of Quantitative Single-Cell Proteomics with Infrared-Tandem Mass Tags - PubMed [pubmed.ncbi.nlm.nih.gov]
- 8. researchgate.net [researchgate.net]
- 9. researchgate.net [researchgate.net]
- 10. benchchem.com [benchchem.com]
- 11. A comprehensive pathway map of epidermal growth factor receptor signaling - PMC [pmc.ncbi.nlm.nih.gov]
- 12. researchgate.net [researchgate.net]
- 13. Evaluation of the Sensitivity of Proteomics Methods Using the Absolute Copy Number of Proteins in a Single Cell as a Metric - PMC [pmc.ncbi.nlm.nih.gov]
- 14. researchgate.net [researchgate.net]

- To cite this document: BenchChem. [A Comparative Guide to Quantitative Proteomic Labeling Strategies]. BenchChem, [2025]. [Online PDF]. Available at: [https://www.benchchem.com/product/b8786649#isotopic-labeling-studies-with-samarium-nitrate]

Disclaimer & Data Validity:

The information provided in this document is for Research Use Only (RUO) and is strictly not intended for diagnostic or therapeutic procedures. While BenchChem strives to provide accurate protocols, we make no warranties, express or implied, regarding the fitness of this product for every specific experimental setup.

Technical Support: The protocols provided are for reference purposes. Unsure if this reagent suits your experiment? [Contact our Ph.D. Support Team for a compatibility check]

Need Industrial/Bulk Grade? Request Custom Synthesis Quote

BenchChem

Our mission is to be the trusted global source of essential and advanced chemicals, empowering scientists and researchers to drive progress in science and industry.

Contact

Address: 3281 E Guasti Rd

Ontario, CA 91761, United States

Phone: (601) 213-4426

Email: info@benchchem.com

© 2025 BenchChem. All rights reserved.