mechanical property comparison of AEPD vs DETA cured epoxies

Author: BenchChem Technical Support Team. **Date**: April 2026

Compound of Interest	
Compound Name:	*N,N-Bis(2-aminoethyl)-1,3-propanediamine*
CAS No.:	*13002-64-7*
Cat. No.:	*B087217*

Get Quote

Technical Comparison Guide: AEPD vs. DETA Cured Epoxies

Executive Summary & Scope

This guide compares the mechanical and chemical properties of epoxy resins cured with AEPD (an alkanolamine) versus DETA (an aliphatic polyamine).

- AEPD (2-Amino-2-ethyl-1,3-propanediol): Primarily used as a modifier, co-curing agent, or in waterborne systems to enhance pigment dispersion, adhesion, and flexibility. It is not a standard structural hardener.
- DETA (Diethylenetriamine): The industry standard for high-strength, high-modulus, and chemical-resistant structural thermosets.

Crucial Disambiguation: While AEPD refers to the diol (CAS 115-70-8), researchers sometimes confuse it with AEP (N-Aminoethylpiperazine, CAS 140-31-8), a cyclic amine hardener. This

© 2026 BenchChem. All rights reserved.

guide focuses on AEPD (Diol) as requested. If your application requires high impact resistance and moderate Tg similar to DETA, you may be looking for AEP, not AEPD.

Chemical Identity & Mechanism

The fundamental difference lies in functionality (

) and reaction sites.

Feature	AEPD	DETA
Chemical Name	2-Amino-2-ethyl-1,3-propanediol	Diethylenetriamine
CAS Number	115-70-8	111-40-0
Structure	Aliphatic Amino Alcohol	Linear Aliphatic Polyamine
Active Amine Hydrogens	2 (Primary Amine)	5 (2 Primary, 1 Secondary)
Hydroxyl Groups	2 (Primary Alcohols)	0
Amine Value	~470 mg KOH/g	~1600 mg KOH/g
Theoretical AHEW	~59.6 g/eq (Amine only)	~20.6 g/eq

Curing Mechanisms

- DETA (Standard Network): Reacts rapidly via nucleophilic attack of amine hydrogens on the epoxide ring. With

  , it forms a highly crosslinked, dense 3D network.

- AEPD (Dual Mechanism):
  - Primary Cure: The primary amine reacts with 2 epoxide groups.
  - Secondary Cure (Etherification): The hydroxyl groups react with epoxides to form ether linkages. This reaction is significantly slower and often requires high temperature or catalysts (e.g., tertiary amines) to proceed to completion.

© 2026 BenchChem. All rights reserved.

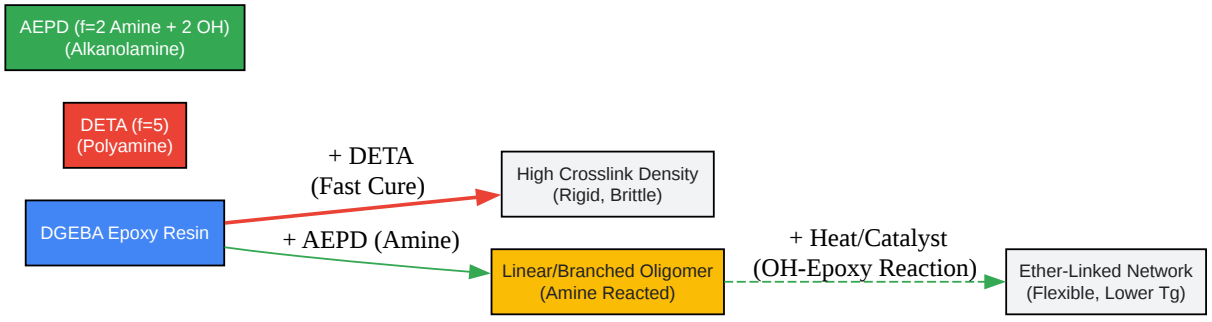

Click to download full resolution via product page

Figure 1: Reaction pathways showing the direct crosslinking of DETA versus the two-stage cure of AEPD involving hydroxyl groups.

Mechanical Property Comparison

The following data contrasts a standard DGEBA epoxy cured with stoichiometric DETA versus one modified/cured with AEPD.

Note: Pure AEPD cured epoxies are rare in structural applications due to low Tg. Data below reflects AEPD's role as a modifier or in high-temperature cure systems compared to standard DETA.

© 2026 BenchChem. All rights reserved.

Property	DETA Cured **(Standard)**	AEPD Modified/Cured	Implication
Glass Transition ( )	115°C – 135°C	60°C – 85°C	DETA offers superior heat resistance. AEPD reduces due to lower crosslink density and ether flexibility.
Tensile Strength	65 – 80 MPa	45 – 60 MPa	DETA provides higher ultimate strength.
Tensile Modulus	~3.0 GPa	~2.2 – 2.6 GPa	AEPD reduces stiffness, useful for stress relief.
Elongation at Break	3 – 5%	6 – 12%	AEPD significantly improves flexibility and ductility.
Impact Strength	Low (Brittle)	Moderate (Improved)	AEPD's aliphatic backbone and ether linkages absorb more energy.
Adhesion (Steel/Al)	Good	Excellent	AEPD's hydroxyl groups promote hydrogen bonding with substrates.

Key Insight: AEPD is often blended with DETA (e.g., 10-20% AEPD) to act as a reactive diluent and flexibilizer, sacrificing some thermal resistance (

) to improve impact toughness and adhesion.

Experimental Protocols

Use these protocols to validate the properties in your lab.

© 2026 BenchChem. All rights reserved.

Protocol A: Stoichiometric Calculation

- DETA: Use Amine Hydrogen Equivalent Weight (AHEW).
  - Example (DGEBA EEW=190):

    .
- AEPD: Calculation depends on cure temperature.
  - Room Temp Cure: Count only Amine Hydrogens (2). AHEW

    .
  - High Temp (>120°C) Cure: Count Amine + Hydroxyls (4). AHEW

    .

Protocol B: Curing Schedules

- DETA System:
  - Mix DGEBA + DETA (10.8 phr). Degas under vacuum (25 inHg) for 10 min.
  - Cure: 24 hours @ 25°C (Room Temp).
  - Post-Cure: 2 hours @ 100°C to maximize

    .
- AEPD System:
  - Mix DGEBA + AEPD (Calculated phr). Note: AEPD is a solid/viscous liquid; may require melting at 40°C.[1]
  - Cure: 2 hours @ 80°C (to ensure homogeneity and initial amine reaction).
  - Post-Cure: 4 hours @ 150°C (essential to drive OH-epoxy etherification).

Processability & Handling

© 2026 BenchChem. All rights reserved.

Parameter	DETA	AEPD
State at RT	Low Viscosity Liquid	Viscous Liquid or Low-Melting Solid
Vapor Pressure	High (Fuming)	Low (Safer Handling)
Pot Life (100g)	Very Short (20-30 min)	Long (>60 min)
Toxicity	Corrosive, Sensitizer	Irritant (Milder)
Water Sensitivity	High (Blushing/Carbamation)	Low (Hydrophilic but stable)

Application Note: AEPD is highly effective in waterborne epoxy coatings where it serves as both a neutralizer for acid-functional resins and a curative, whereas DETA is strictly for solvent-free or solvent-based structural parts.

References

- Comparison of Amine Curing Agents: Structural and mechanical properties of DGEBA cured with aliphatic amines. ResearchGate.
- AEPD Product Data: AEPD™ 85 Technical Data Sheet. Advancion (formerly Angus).
- Alkanolamine Curing Mechanism: Reaction kinetics of epoxy with amino-alcohols. Polymer Science Series.
- Hyperbranched Polymers via AEPD: Synthesis of hyperbranched poly(amino ester)s using AEPD. ACS Publications.

Need Custom Synthesis?

BenchChem offers custom synthesis for rare earth carbides and specific isotopiclabeling.

Email: info@benchchem.com or Request Quote Online.

Sources

- 1. catalogimages.wiley.com [catalogimages.wiley.com]

- To cite this document: BenchChem. [mechanical property comparison of AEPD vs DETA cured epoxies]. BenchChem, [2026]. [Online PDF]. Available at: [https://www.benchchem.com/product/b087217/docs#mechanical-property-comparison-of-aepd-vs-deta-cured-epoxies]

Disclaimer & Data Validity:

The information provided in this document is for Research Use Only (RUO) and is strictly not intended for diagnostic or therapeutic procedures. While BenchChem strives to provide accurate protocols, we make no warranties, express or implied, regarding the fitness of this product for every specific experimental setup.

Technical Support: The protocols provided are for reference purposes. Unsure if this reagent suits your experiment?

Need Industrial/Bulk Grade? Request Custom Synthesis Quote

BenchChem

Our mission is to be the trusted global source of essential and advanced chemicals, empowering scientists and researchers to drive progress in science and industry.

Contact

Address: 3281 E Guasti Rd

Ontario, CA 91761, United States

Phone: (601) 213-4426

Email: info@benchchem.com

Contact our Ph.D. Support Team for a compatibility check

© 2026 BenchChem. All rights reserved.