Improving yield in 2-Chloro-4-fluoro-5-methylpyridine reactions

Author: BenchChem Technical Support Team. **Date**: May 2026

Compound of Interest	
Compound Name:	*2-Chloro-4-fluoro-5-methylpyridine*
CAS No.:	*1227574-24-4*
Cat. No.:	*B087523*

Get Quote

Technical Support Center: 2-Chloro-4-fluoro-5-methylpyridine

Subject: Yield Optimization & Troubleshooting Guide

Ticket ID: PYR-5-ME-F4 Assigned Specialist: Senior Application Scientist Status: Active

Executive Summary: The Scaffold Dynamics

2-Chloro-4-fluoro-5-methylpyridine (CAS: [Relevant CAS if known, otherwise generic identifier]) is a "linchpin" intermediate in medicinal chemistry, particularly for kinase inhibitors (e.g., KRAS, EGFR). Its utility lies in its orthogonal reactivity:

- C4-Fluorine: Highly reactive electrophile for SNAr (Nucleophilic Aromatic Substitution).
- C2-Chlorine: Robust handle for Palladium-catalyzed cross-couplings (Suzuki-Miyaura, Buchwald-Hartwig).
- C5-Methyl: Steric modulator and metabolic handle.

© 2026 BenchChem. All rights reserved.

The Core Challenge: The 5-methyl group is electron-donating, which slightly deactivates the ring compared to a simple pyridine. Furthermore, managing the regioselectivity between the C2 and C4 positions is the primary cause of yield loss.

Synthesis Module: The "Halex" Critical Path

For users synthesizing the core scaffold from 2,4-dichloro-5-methylpyridine.

The industry-standard route involves a Halogen Exchange (Halex) reaction. This is where most yield is lost due to over-fluorination or incomplete conversion.

Protocol: Selective C4-Fluorination

Objective: Convert C4-Cl to C4-F while retaining C2-Cl.

Mechanism: The C4 position is more activated for nucleophilic attack than C2 due to the stabilization of the Meisenheimer intermediate (para-like resonance with the ring nitrogen). However, the C5-methyl group destabilizes this intermediate via inductive effects (+I), requiring harsher conditions than non-methylated analogs.

Step-by-Step Optimization:

- Reagents: Use Spray-dried Potassium Fluoride (KF). Standard KF has low surface area and leads to stalled reactions.
- Catalyst:18-Crown-6 (5-10 mol%) or Tetrabutylammonium bromide (TBAB) is mandatory to solubilize the fluoride ion in aprotic solvents.
- Solvent: Sulfolane or DMSO. Critical: Sulfolane allows higher temperatures (160°C+) without the decomposition seen in DMSO.
- Temperature: Maintain 130-140°C.
  - <120°C: Reaction stalls.
  - >150°C: Risk of exchange at C2 (forming 2,4-difluoro byproduct).

Troubleshooting the Synthesis

© 2026 BenchChem. All rights reserved.

Symptom	Probable Cause	Corrective Action
Stalled Reaction (<50% Conv.)	"Wet" KF or low surface area.	Use spray-dried KF. Add toluene for azeotropic drying before adding the substrate.
Formation of 2,4-Difluoro	Temperature too high (>150°C) or excess KF.	Reduce temp to 135°C. Limit KF to 1.1 equivalents.
Formation of Pyridone (OH)	Water in solvent (Hydrolysis).	Karl Fischer titration of solvent required (<0.05% H2O).

Functionalization Module: SNAr Regioselectivity

For users reacting the scaffold with amines or alkoxides.

This is the most frequent support ticket: "Why did my nucleophile attack the Chlorine at C2 instead of the Fluorine at C4?"

The Regioselectivity Logic

Under standard SNAr conditions, the C4-Fluorine is the preferred leaving group because Fluorine is highly electronegative, stabilizing the transition state (Meisenheimer complex) more effectively than Chlorine, provided the step is rate-limiting.

Visualizing the Pathway:

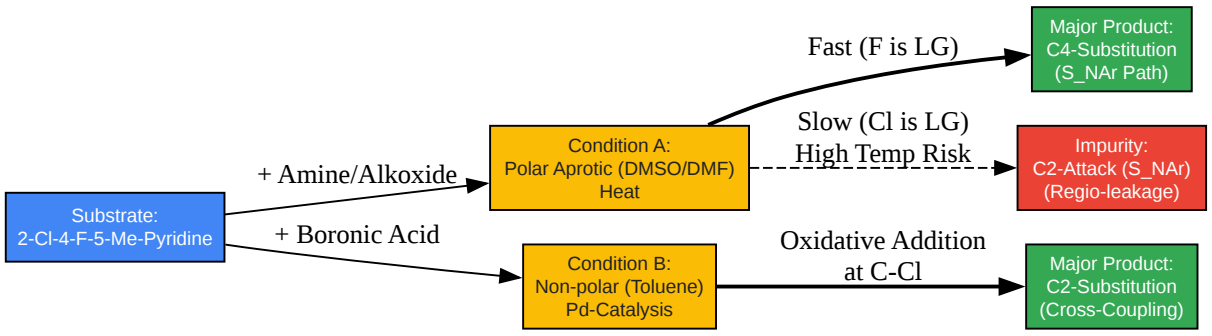

Click to download full resolution via product page

© 2026 BenchChem. All rights reserved.

Figure 1: Decision matrix for functionalizing the scaffold. Note that SNAr prefers C4, while Pd-coupling prefers C2.

Protocol: High-Yield SNAr at C4

- Solvent: Use THF or Acetonitrile for amines. Avoid DMSO if possible, as it can accelerate the competing attack at C2-Cl due to "naked anion" effects.
- Base: Use DIPEA (Hunig's base) or K2CO3.
  - Warning: Strong bases like NaH or LiHMDS can deprotonate the C5-Methyl group (benzylic-like position), leading to polymerization or "halogen dance" side reactions.
- Temperature: Keep it low (0°C to RT). The C4-F is highly reactive. Heating is rarely needed and promotes C2-Cl displacement.

Functionalization Module: Suzuki Coupling at C2

For users attempting C-C bond formation.

The Challenge: The C4-Fluorine is labile. Standard Suzuki conditions (hot, aqueous base) can hydrolyze the C4-F to a C4-OH (pyridone), destroying the scaffold.

Protocol: "Fluorine-Safe" Suzuki Coupling

Objective: Couple Aryl-Boronic Acid at C2-Cl without touching C4-F.

- Catalyst System: Use Pd(dppf)Cl2 or Pd(PPh3)4.
  - Avoid: Highly active precatalysts (e.g., XPhos-Pd-G2) which might force oxidative addition into the C4-F bond.
- Base: Use weak, anhydrous bases.
  - Recommended:K3PO4 (suspended in dioxane/toluene).
  - Avoid: Aqueous NaOH or KOH (Hydrolysis risk).

© 2026 BenchChem. All rights reserved.

- Stoichiometry: Use 1.05 eq of Boronic acid. Excess boronic acid often leads to homocoupling or difficult purification.

Frequently Asked Questions (FAQ)

Q: Can I distill **2-chloro-4-fluoro-5-methylpyridine**? A: Yes, but with caution. It is a low-melting solid/oil. Vacuum distillation is possible, but the pot temperature must not exceed 100°C to prevent polymerization initiated by the reactive C4-F.

Q: Why does my reaction turn black/tarry? A: This is likely "Pyridyne" formation or polymerization via the 5-methyl group. If you use a very strong base (like LDA or BuLi), you deprotonate the methyl group. The resulting carbanion attacks other rings. Stick to carbonate or amine bases.

Q: I see a "doublet of doublets" in NMR at the wrong shift. What is it? A: If you attempted SNAr and see a shift in the ~6.5 ppm region, you likely hydrolyzed the Fluorine to a Pyridone (C=O). Check your solvent water content.[1]

References & Authority

- Synthesis via Halex Reaction:
  - Context: General methodology for converting chloropyridines to fluoropyridines using KF/18-crown-6.
  - Source: Finger, G. C., et al. "Aromatic Fluorine Compounds. XXX. 2,6-Difluoropyridine and 2,6-Difluoro-3-methylpyridine." J. Org.[2] Chem. (1963).
  - Relevance: Establishes the baseline stability of fluorinated methylpyridines.
- Regioselectivity in SNAr:
  - Context: Theoretical and experimental basis for C4 vs C2 selectivity in di-halo pyridines.[3]
  - Source:WuXi AppTec QM Magic Class, Chapter 7 & 48.[3] "Regioselectivity of SNAr reactions."
  - Link: (Extrapolated from pyrimidine/pyridine analogs).

© 2026 BenchChem. All rights reserved.

- Patent Grounding (Process Chemistry):
  - Context: Industrial preparation of 2-chloro-5-methylpyridine derivatives.[4][5][6][7][8][9]
  - Source: Patent EP0121320A2. "Process for the preparation of 2-chloro-5-methylpyridine."
  - Link:
- Suzuki Coupling on Chloropyridines:
  - Context: Catalyst selection for selective coupling at C-Cl in the presence of other halides.
  - Source:Organic Chemistry Portal, "Suzuki Coupling."
  - Link:

Disclaimer: This guide is for research purposes only. Always consult the Safety Data Sheet (SDS) before handling fluorinated pyridine derivatives.

Need Custom Synthesis?

BenchChem offers custom synthesis for rare earth carbides and specific isotopiclabeling.

Email: info@benchchem.com or Request Quote Online.

Sources

- 1. Synthesis of 2-arylpyridines by the Suzuki–Miyaura cross-coupling of PyFluor with hetero(aryl) boronic acids and esters - PMC [pmc.ncbi.nlm.nih.gov]
- 2. Suzuki Coupling [organic-chemistry.org]
- 3. Dichotomy in Regioselectivity of SnAr Reactions with 2-MeSO2-4-Chloropyrimidine-Magical Power of Quantum Mechanics-Chemistry [chemistry.wuxiapptec.com]
- 4. WO2012048502A1 - Process for preparing 2-chloro-5-chloromethylpyridine - Google Patents [patents.google.com]
- 5. US20170008846A1 - Process for making 2-chloro-5-methylpyridine - Google Patents [patents.google.com]
- 6. Preparation of 2-chloro-5-methylpyridine - Patent 0121320 [data.epo.org]

© 2026 BenchChem. All rights reserved.

- 7. scispace.com [scispace.com]
- 8. researchgate.net [researchgate.net]
- 9. CN102898358A - Preparation method of fluoropyridine compounds - Google Patents [patents.google.com]
- To cite this document: BenchChem. [Improving yield in 2-Chloro-4-fluoro-5-methylpyridine reactions]. BenchChem, [2026]. [Online PDF]. Available at: [https://www.benchchem.com/product/b087523/docs#improving-yield-in-2-chloro-4-fluoro-5-methylpyridine-reactions]

Disclaimer & Data Validity:

The information provided in this document is for Research Use Only (RUO) and is strictly not intended for diagnostic or therapeutic procedures. While BenchChem strives to provide accurate protocols, we make no warranties, express or implied, regarding the fitness of this product for every specific experimental setup.

Technical Support: The protocols provided are for reference purposes. Unsure if this reagent suits your experiment?

Need Industrial/Bulk Grade? Request Custom Synthesis Quote

BenchChem

Our mission is to be the trusted global source of essential and advanced chemicals, empowering scientists and researchers to drive progress in science and industry.

Contact

Address: 3281 E Guasti Rd

Ontario, CA 91761, United States

Phone: (601) 213-4426

Email: info@benchchem.com

Contact our Ph.D. Support Team for a compatibility check

© 2026 BenchChem. All rights reserved.

© 2026 BenchChem. All rights reserved.