GC-MS Characterization of 3,5-Dibromo-2-ethylthiophene: A Comparative Fragmentation Guide

Author: BenchChem Technical Support Team. **Date**: April 2026

Compound of Interest

Compound Name:	*3,5-Dibromo-2-ethylthiophene*
CAS No.:	*62323-45-9*
Cat. No.:	*B8656155*

Get Quote

Abstract

In the synthesis of thiophene-based intermediates for conductive polymers and pharmaceuticals, the precise regiochemical identification of halogenated derivatives is critical. This guide provides an in-depth technical comparison of the GC-MS fragmentation pattern of **3,5-Dibromo-2-ethylthiophene** against its primary regioisomers and synthetic precursors.[1] We analyze the distinct isotopic clustering and fragmentation pathways that validate structural integrity, offering a self-validating protocol for analytical chemists.

Introduction: The Regioselectivity Challenge

The bromination of 2-ethylthiophene is a standard electrophilic aromatic substitution used to generate precursors for Grignard metathesis polymerizations. However, the reaction can yield a mixture of regioisomers (e.g., 2,3-dibromo-5-ethylthiophene) and under-brominated species (e.g., 2-bromo-5-ethylthiophene).[1]

© 2026 BenchChem. All rights reserved.

While Nuclear Magnetic Resonance (NMR) is definitive for structural elucidation, Gas Chromatography-Mass Spectrometry (GC-MS) remains the workhorse for rapid process monitoring and purity assessment.[1] The challenge lies in distinguishing the **3,5-dibromo-2-ethylthiophene** (the thermodynamic product) from its isomers, which share identical molecular weights (MW 270 Da) and similar polarity.[1]

This guide establishes the Fragmentation Fingerprint required to confidently identify the 3,5-isomer, focusing on the stability of the

-cleavage product and the characteristic isotopic envelope of the dibromo-system.

Comparative Analysis: Target vs. Alternatives

The following table contrasts the mass spectral behavior of the target molecule against its most common synthetic impurities.

Table 1: Mass Spectral Differentiators of Brominated Ethylthiophenes

© 2026 BenchChem. All rights reserved.

Feature	3,5-Dibromo-2-ethylthiophene **(Target)**	2,3-Dibromo-5-ethylthiophene **(Isomer)**	2-Bromo-5-ethylthiophene **(Precursor)**
Molecular Ion ( )	m/z 268, 270, 272 (1:2:[1]1)	m/z 268, 270, 272 (1:2:1)	m/z 190, 192 (1:1)
Base Peak	m/z 253, 255, 257 ( )	m/z 253, 255, 257 ( )	m/z 175, 177 ( )
Intensity	Moderate (Loss of Br at C-5 is favorable)	High (Steric relief at C-2/C-3 promotes loss)	Moderate
Differentiation Key	Ratio of to .[1][2] The 3,5-isomer forms a highly stable cation upon methyl loss due to resonance with the C-2 position.[1]	Higher relative abundance of due to "crowding" of adjacent bromines (ortho-effect).[1]	Lack of M+4 peak (only one Br).[1]

© 2026 BenchChem. All rights reserved.

> *Technical Insight: The presence of the ethyl group at the 2-position dictates the fragmentation. The loss of a methyl radical (*
>
>) via
>
> -cleavage is the dominant pathway, forming a resonance-stabilized thienylic cation. In the 3,5-isomer, this cation is stabilized by the sulfur atom and the bromine at C-3, making the
>
> cluster the base peak.

Detailed Fragmentation Mechanism[3]

The fragmentation of **3,5-Dibromo-2-ethylthiophene** under Electron Ionization (EI, 70 eV) follows a predictable pathway governed by the stability of the thiophene ring and the weakness of the C-Br bond.

Primary Pathway:

-Cleavage (Methyl Loss)

The radical cation (

) undergoes homolytic cleavage at the ethyl group's C-C bond.

- Precursor: m/z 268/270/272[1]
- Process: Loss of Methyl Radical (15 Da)
- Product:

  (m/z 253/255/257)
- Mechanism: The resulting carbocation is benzylic-like (thienylic), stabilized by the adjacent aromatic ring.[1] This is typically the Base Peak (100% RA).

© 2026 BenchChem. All rights reserved.

Secondary Pathway: Dehalogenation (Bromine Loss)

Direct cleavage of the C-Br bond.

- Precursor: m/z 268/270/272[1]
- Process: Loss of Bromine Radical (

  , 79/81 Da)
- Product:

  (m/z 189/191)[1]
- Isotope Pattern: The product retains one bromine, shifting the isotope ratio from 1:2:1 to 1:1. [1]

Visualizing the Pathway

The following diagram illustrates the causal relationships in the fragmentation cascade.

© 2026 BenchChem. All rights reserved.

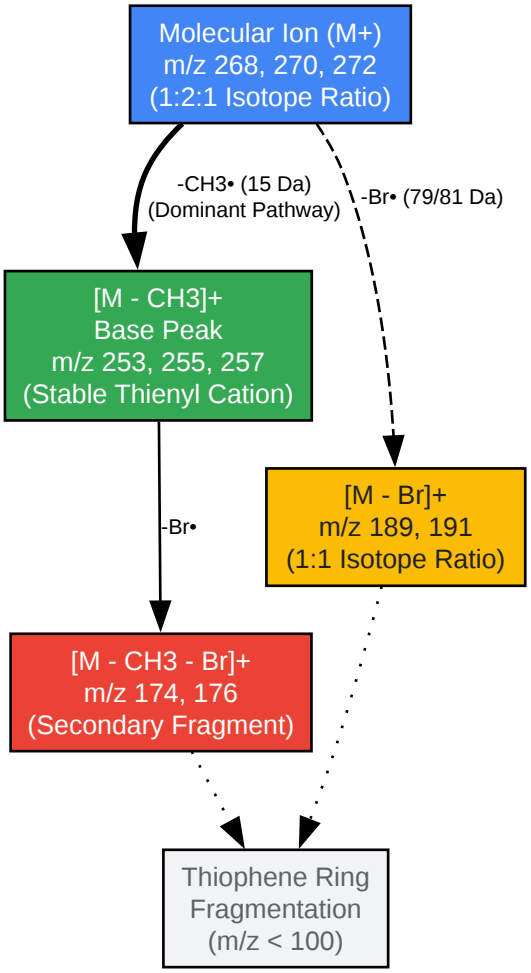

Click to download full resolution via product page

Figure 1: Mechanistic fragmentation pathway of **3,5-Dibromo-2-ethylthiophene** under 70 eV Electron Ionization.

Experimental Protocol: Self-Validating Workflow

To ensure reproducibility and distinguish the target from isomers, follow this validated GC-MS protocol.

A. Sample Preparation[1][3][4]

- Solvent: Dichloromethane (DCM) or Hexane (HPLC Grade).[1] Avoid methanol as it may react with labile bromines under hot injection port conditions.[1]
- Concentration: 100 µg/mL (100 ppm). High concentrations can lead to detector saturation and distorted isotope ratios.[1]

© 2026 BenchChem. All rights reserved.

- Filtration: 0.2 µm PTFE filter to remove inorganic salts (e.g., MgBr salts from Grignard synthesis).

B. GC-MS Parameters

- Column: Rxi-5Sil MS or equivalent (30m x 0.25mm ID x 0.25µm df).[1] A low-polarity phase is ideal for halogenated aromatics.[1]
- Inlet: Split mode (20:1), 250°C.
- Carrier Gas: Helium @ 1.0 mL/min (Constant Flow).
- Oven Program:
  - Hold 60°C for 1 min.
  - Ramp 20°C/min to 280°C.
  - Hold 3 min.
- MS Source: 230°C (EI mode, 70 eV).
- Scan Range: m/z 40–400.[1][5] (Must capture the M+4 peak at 272).

C. Validation Logic (System Suitability)

- Check 1 (Isotopes): Verify the molecular ion cluster at m/z 268, 270, 272. The intensities must match the theoretical 1:2:1 distribution (

  10%). Deviations indicate co-eluting impurities or detector saturation.[1]
- Check 2 (Fragment Ratio): The

  peak (m/z 253 cluster) should be the base peak (100%). If m/z 189 (

) is the base peak, suspect the 2,3-dibromo isomer or thermal degradation in the inlet.

© 2026 BenchChem. All rights reserved.



Click to download full resolution via product page

Figure 2: Step-by-step analytical workflow for the characterization of brominated thiophenes.

References

- National Institute of Standards and Technology (NIST).Mass Spectrum of 2-Ethylthiophene (Precursor Data).[1] NIST Chemistry WebBook.[1] Available at: [Link]
- Lob, P., et al. "Bromination of Thiophene in Micro Reactors."[1][6] Letters in Organic Chemistry, 2005.[1] (Regioselectivity of Bromination).[7] Available at: [Link]
- Barker, J., et al. "The Mass Spectra of Some Alkylthiophenes."[1] Journal of the Chemical Society B, 1969. (Fragmentation Mechanisms).[1][5][3][8][9][10] Available at: [Link]

Need Custom Synthesis?

BenchChem offers custom synthesis for rare earth carbides and specific isotopiclabeling.

Email: info@benchchem.com or Request Quote Online.

Sources

- 1. 3,5-Dibromo-2-methylthiophene | C5H4Br2S | CID 122373 - PubChem [pubchem.ncbi.nlm.nih.gov]
- 2. chemscene.com [chemscene.com]
- 3. pdf.benchchem.com [pdf.benchchem.com]
- 4. researchgate.net [researchgate.net]
- 5. pdf.benchchem.com [pdf.benchchem.com]
- 6. eurekaselect.com [eurekaselect.com]

© 2026 BenchChem. All rights reserved.

- 7. Regioselective bromination of fused heterocyclic N-oxides - PubMed [pubmed.ncbi.nlm.nih.gov]
- 8. chem.libretexts.org [chem.libretexts.org]
- 9. Dependence of mass spectrometric fragmentation on the bromine substitution pattern of polybrominated diphenyl ethers - PubMed [pubmed.ncbi.nlm.nih.gov]
- 10. m.youtube.com [m.youtube.com]
- To cite this document: BenchChem. [GC-MS Characterization of 3,5-Dibromo-2-ethylthiophene: A Comparative Fragmentation Guide]. BenchChem, [2026]. [Online PDF]. Available at: [https://www.benchchem.com/product/b8656155/docs#gc-ms-characterization-of-3-5-dibromo-2-ethylthiophene-a-comparative-fragmentation-guide]

Disclaimer & Data Validity:

The information provided in this document is for Research Use Only (RUO) and is strictly not intended for diagnostic or therapeutic procedures. While BenchChem strives to provide accurate protocols, we make no warranties, express or implied, regarding the fitness of this product for every specific experimental setup.

Technical Support: The protocols provided are for reference purposes. Unsure if this reagent suits your experiment?

Need Industrial/Bulk Grade? Request Custom Synthesis Quote

BenchChem

Our mission is to be the trusted global source of essential and advanced chemicals, empowering scientists and researchers to drive progress in science and industry.

Contact

Address: 3281 E Guasti Rd

Ontario, CA 91761, United States

Phone: (601) 213-4426

Email: info@benchchem.com

© 2026 BenchChem. All rights reserved.

Contact our Ph.D. Support Team for a compatibility check

© 2026 BenchChem. All rights reserved.