Advanced Synthesis & Stereocontrol of 4-Substituted Phenylcyclohexanols

Author: BenchChem Technical Support Team. **Date**: May 2026

Compound of Interest

Compound Name:	*4-(4-Propylphenyl)cyclohexan-1-ol*
CAS No.:	*85348-32-9*
Cat. No.:	*B8617030*

Get Quote

Content Type: Technical Whitepaper Audience: Medicinal Chemists, Process Chemists, Materials Scientists

Executive Summary: The Scaffold & Its Utility

The 4-substituted phenylcyclohexanol scaffold is a privileged structural motif in both pharmaceutical sciences and materials engineering. In drug discovery, it serves as a pharmacophore in analgesics (e.g., Tramadol analogs), sigma receptor ligands, and inhibitors of cholesterol absorption. In materials science, particularly liquid crystals, the trans-isomer is prized for its high aspect ratio and mesogenic properties, which drive phase transition temperatures.

Synthesizing this scaffold requires rigorous stereochemical control. The cyclohexane ring allows for two diastereomers: cis (axial hydroxyl/equatorial phenyl) and trans (equatorial hydroxyl/equatorial phenyl). This guide details the causal mechanisms and self-validating protocols to selectively access either isomer with high purity.

Strategic Synthetic Pathways

© 2026 BenchChem. All rights reserved.

The synthesis typically proceeds via two primary routes: the Stereoselective Reduction of Cyclohexanones (Route A) and the Catalytic Hydrogenation of Phenols (Route B). Route A offers the highest stereochemical precision for small-to-medium scale synthesis, while Route B is preferred for industrial bulk preparation, often requiring subsequent separation or isomerization.

Diagram 1: Strategic Synthetic Flowchart

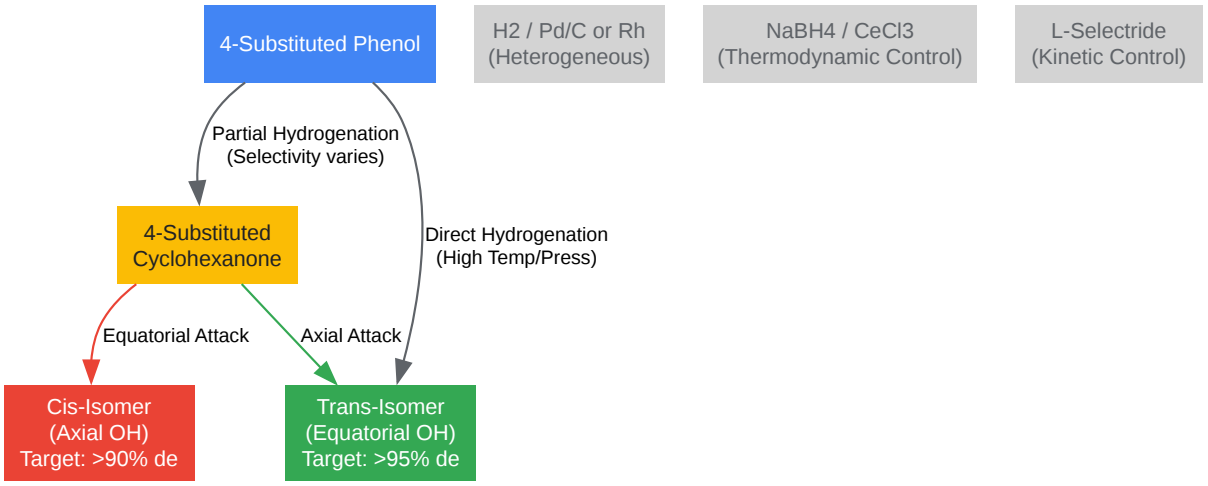

Click to download full resolution via product page

Caption: Divergent synthetic pathways for accessing cis- and trans-4-substituted phenylcyclohexanols. Route A (via Ketone) offers superior stereocontrol.

Route A: Stereoselective Reduction of Cyclohexanones

This route is the industry standard for generating high-purity isomers. The stereochemical outcome is dictated by the trajectory of the hydride attack on the carbonyl carbon.

Mechanism: Steric Approach vs. Torsional Strain

The 4-phenyl group locks the cyclohexane ring into a specific chair conformation where the bulky phenyl group occupies the equatorial position to minimize 1,3-diaxial interactions.

© 2026 BenchChem. All rights reserved.

- Thermodynamic Control (Formation of Trans):
  - Reagent: Sodium Borohydride ($NaBH_4$), often with Cerium(III) Chloride (Luche conditions).
  - Mechanism: Small hydride donors prefer axial attack. Although this approach is sterically more hindered by the axial hydrogens at C3 and C5, it leads to the thermodynamically more stable equatorial alcohol (trans-isomer).
  - Why $CeCl_3$? Lanthanides coordinate to the carbonyl oxygen, increasing electrophilicity and favoring the "hard" axial attack, often boosting trans selectivity to >95%.
- Kinetic Control (Formation of Cis):
  - Reagent: L-Selectride (Lithium tri-sec-butylborohydride).
  - Mechanism: The bulky sec-butyl groups make axial attack sterically prohibitive. The hydride is forced to attack from the equatorial face (the less hindered periphery), pushing the forming hydroxyl group into the axial position (cis-isomer).

Diagram 2: Stereochemical Attack Trajectories

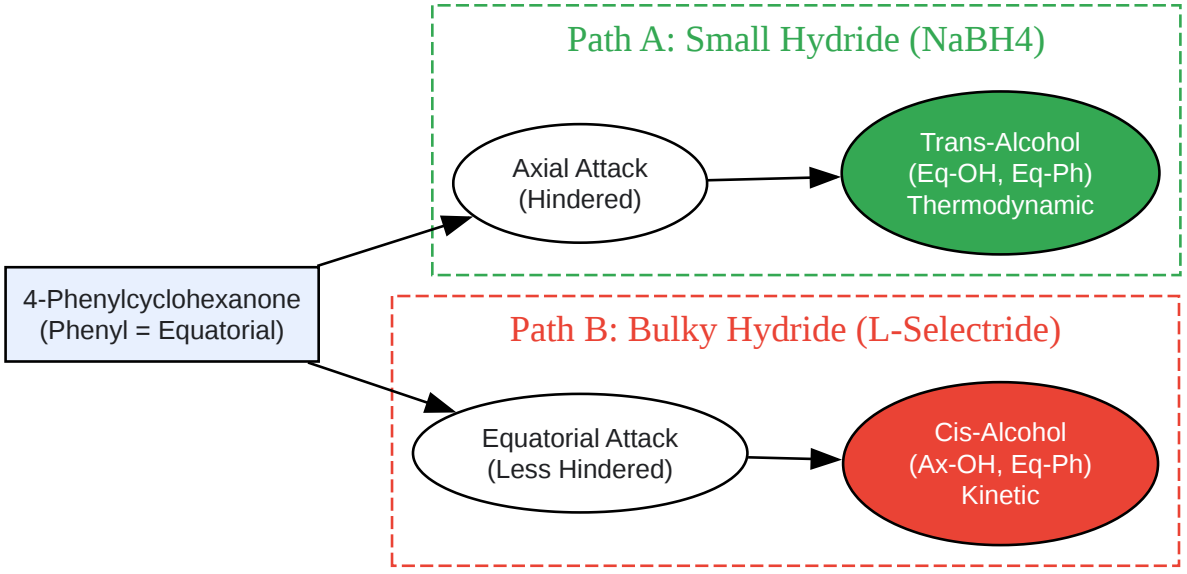

Click to download full resolution via product page

© 2026 BenchChem. All rights reserved.

Caption: Mechanistic bifurcation based on hydride size. Bulky hydrides force equatorial attack (Kinetic), while small hydrides permit axial attack (Thermodynamic).

Detailed Experimental Protocols

Protocol 1: Synthesis of Trans-4-(4-Methoxyphenyl)cyclohexanol (Luche Reduction)

Objective: Access the thermodynamically stable trans-isomer (equatorial OH) with high diastereomeric excess (de).

Reagents:

- 4-(4-Methoxyphenyl)cyclohexanone (1.0 eq)
- Cerium(III) Chloride Heptahydrate ($CeCl_3 \cdot 7H_2O$) (1.1 eq)
- Sodium Borohydride ($NaBH_4$) (1.2 eq)
- Methanol (0.2 M concentration relative to ketone)

Step-by-Step Methodology:

- Complexation: In a round-bottom flask, dissolve the ketone and $CeCl_3 \cdot 7H_2O$ in Methanol. Stir at room temperature for 15 minutes. Causality: This ensures the lanthanide coordinates to the carbonyl oxygen, activating it and shielding the equatorial face.
- Cooling: Cool the solution to -78°C (dry ice/acetone bath). Causality: Low temperature suppresses the kinetic equatorial attack pathway.
- Addition: Add $NaBH_4$ portion-wise over 10 minutes. Evolution of H_2 gas will occur.[1]
- Reaction: Stir at -78°C for 1 hour, then allow to warm to 0°C over 2 hours. Monitor by TLC (30% EtOAc/Hexanes).
- Quench: Quench with saturated aqueous NH_4Cl.

© 2026 BenchChem. All rights reserved.

- Extraction: Extract with Ethyl Acetate (3x). Wash combined organics with brine, dry over Na_2SO_4, and concentrate.[2]
- Purification: Recrystallize from Hexane/EtOAc.
  - Expected Yield: 85-92%
  - Selectivity: >95:5 trans:cis

Protocol 2: Synthesis of Cis-4-(4-Methoxyphenyl)cyclohexanol (L-Selectride)

Objective: Access the kinetically favored cis-isomer (axial OH).

Reagents:

- 4-(4-Methoxyphenyl)cyclohexanone (1.0 eq)
- L-Selectride (1.0 M in THF) (1.2 eq)
- Anhydrous THF (0.1 M)
- 30% H_2O_2 / 3M NaOH (for oxidative workup)

Step-by-Step Methodology:

- Setup: Flame-dry a 2-neck flask under Argon. Dissolve ketone in anhydrous THF.
- Cooling: Cool to -78°C. Causality: Essential to maximize the steric differentiation between axial and equatorial attack vectors.
- Reduction: Add L-Selectride solution dropwise via syringe pump over 30 minutes.
- Incubation: Stir at -78°C for 2 hours. Do not allow to warm above -50°C before quenching.
- Oxidative Workup:
  - Caution: Borane byproducts are formed.

© 2026 BenchChem. All rights reserved.

- Add 3M NaOH (2 eq) followed carefully by 30% H_2O_2 (3 eq). Stir at 0°C for 1 hour.

- Extraction: Extract with Ether or DCM.
- Purification: Flash chromatography is usually required to remove trace trans isomer.
  - Expected Yield: 75-85%
  - Selectivity: >90:10 cis:trans

Quantitative Data Summary

Parameter	$NaBH_4$ / $CeCl_3$ (Protocol 1)	L-Selectride (Protocol 2)	Catalytic H_2 (Pd/C)
Major Product	Trans (Equatorial OH)	Cis (Axial OH)	Mixed (Solvent dependent)
Primary Mechanism	Axial Hydride Attack	Equatorial Hydride Attack	Surface Adsorption
Selectivity (de)	> 95%	> 90%	40-70% (Variable)
Scalability	High (Kg scale)	Low/Medium (Reagent cost)	High (Industrial)
Key Constraint	Requires $CeCl_3$ for max selectivity	Cryogenic conditions (-78°C)	Requires high pressure H_2

Characterization & Troubleshooting

NMR Validation (Self-Validating System): The stereochemistry is confirmed by the coupling constants of the proton at C1 (the carbinol proton).

- Trans-Isomer: The C1 proton is axial. It exhibits a large coupling constant (

  Hz) due to diaxial coupling with C2/C6 axial protons.
  - Signal: Triplet of triplets (tt) or broad multiplet,

    ppm.

© 2026 BenchChem. All rights reserved.

- Cis-Isomer: The C1 proton is equatorial. It exhibits small coupling constants (

  Hz) due to equatorial-axial/equatorial-equatorial coupling.

  - Signal: Narrow multiplet or quintet,

    ppm (typically downfield of the trans signal).

References

- Cerium(III) Chloride-Mediated Stereoselective Reduction: Maity, P., et al. "Cerium(III) Chloride-Mediated Stereoselective Reduction of a 4-Substituted Cyclohexanone Using NaBH4."[3] Organic Process Research & Development, 2019.
- L-Selectride Reduction Mechanism: Brown, H. C., & Krishnamurthy, S. "Lithium Tri-sec-butylborohydride. A New Reagent for the Reduction of Cyclic and Bicyclic Ketones with Super Stereoselectivity." Journal of the American Chemical Society, 1972.
- Catalytic Hydrogenation of Phenols: Wang, Y., et al. "Highly selective hydrogenation of phenol to cyclohexanol over MOF-derived non-noble Co-Ni@NC catalysts." Chemical Engineering Science, 2017.[4]
- Stereochemical Analysis of Cyclohexanones: Eliel, E. L., et al. "Conformational Analysis. XV. The Conformational Enthalpy, Entropy, and Free Energy of the Hydroxyl, Amino, and Methyl Groups." Journal of the American Chemical Society, 1965.
- Luche Reduction Protocol: Gemal, A. L., & Luche, J. L. "Lanthanoids in organic synthesis. 6. Reduction of alpha-enones by sodium borohydride in the presence of lanthanoid chlorides: synthetic and mechanistic aspects." Journal of the American Chemical Society, 1981.

Need Custom Synthesis?

BenchChem offers custom synthesis for rare earth carbides and specific isotopiclabeling.

Email: info@benchchem.com or Request Quote Online.

Sources

- 1. m.youtube.com [m.youtube.com]
- 2. A General and Simple Diastereoselective Reduction by l-Selectride: Efficient Synthesis of Protected (4S,5S)-Dihydroxy Amides - PMC [pmc.ncbi.nlm.nih.gov]
- 3. pubs.acs.org [pubs.acs.org]
- 4. daneshyari.com [daneshyari.com]
- To cite this document: BenchChem. [Advanced Synthesis & Stereocontrol of 4-Substituted Phenylcyclohexanols]. BenchChem, [2026]. [Online PDF]. Available at: [https://www.benchchem.com/product/b8617030/docs#advanced-synthesis-stereocontrol-of-4-substituted-phenylcyclohexanols]

Disclaimer & Data Validity:

The information provided in this document is for Research Use Only (RUO) and is strictly not intended for diagnostic or therapeutic procedures. While BenchChem strives to provide accurate protocols, we make no warranties, express or implied, regarding the fitness of this product for every specific experimental setup.

Technical Support: The protocols provided are for reference purposes. Unsure if this reagent suits your experiment?

Need Industrial/Bulk Grade? Request Custom Synthesis Quote

BenchChem

Our mission is to be the trusted global source of essential and advanced chemicals, empowering scientists and researchers to drive progress in science and industry.

Contact

Address: 3281 E Guasti Rd

Ontario, CA 91761, United States

Phone: (601) 213-4426

Email: info@benchchem.com

© 2026 BenchChem. All rights reserved.

Contact our Ph.D. Support Team for a compatibility check

© 2026 BenchChem. All rights reserved.