Carbon-Fluorine Engineering Hub: Precision Control of Graphite Fluorination

Author: BenchChem Technical Support Team. **Date**: February 2026

Compound of Interest		
Compound Name:	*Fluorine, compd. with graphite*	
CAS No.:	*11113-63-6*	
Cat. No.:	*B086590*	Get Quote

Status: Operational Support Level: Tier 3 (Senior Application Scientist) Topic: Controlling Degree of Fluorination (

in

) Audience: R&D Chemists, Battery Materials Engineers

Mission Statement

Welcome to the Carbon-Fluorine Engineering Hub. You are likely here because "Graphite Fluoride" is not a single material—it is a tunable spectrum ranging from conductive intercalation compounds (

) to insulating, super-hydrophobic covalent solids (

).

This guide abandons generic textbook definitions. Instead, we focus on the process levers you can pull to precisely dictate the Fluorine-to-Carbon ratio (

), control the nature of the C-F bond (semi-ionic vs. covalent), and validate your results with spectroscopic rigor.

Module 1: Kinetic Control & Stoichiometry

How do I hit a specific F/C ratio (

© 2026 BenchChem. All rights reserved.

)?

The "x" Factor Protocol

The degree of fluorination is primarily a function of reaction temperature and the "shell effect" of fluorine diffusion.

Q: I am stuck at

(i.e.,

). How do I push to

(

)? A: You are likely hitting a kinetic barrier known as the

plateau.

- The Mechanism: At intermediate temperatures (350–450°C), fluorine atoms tend to occupy every other carbon site to minimize electrostatic repulsion, forming the

  phase.

- The Fix: You must cross the activation energy threshold for full saturation.
  - Increase Temperature: Ramp to >600°C. Note that at this temperature, the planar graphite lattice buckles into a "puckered" chair-like conformation (

    rehybridization), allowing fluorine to access adjacent carbons.
  - Pressure Assist: If temperature is capped by equipment limits, increase

    partial pressure. However, temperature is the dominant variable for stoichiometry.

Q: My reaction yields are inconsistent. The surface is fluorinated, but the core is graphitic. A: You are experiencing diffusion-limited fluorination (Core-Shell Defect).

- The Cause: The reaction rate at the surface is faster than the diffusion of

  gas into the graphene interlayers. The outer

© 2026 BenchChem. All rights reserved.

layers act as a passivation barrier.

- The Fix:
  - Induce Lag Time: Lower the initial reaction temperature to allow gas intercalation before ramping up to the reaction temperature.
  - Particle Size Reduction: Switch to smaller mesh graphite (e.g., <10 µm) to reduce the diffusion path length.
  - Dilution: Reduce

    concentration (e.g., 10%

    in

) to slow the surface reaction, allowing time for diffusion.

Visualization: The Fluorination Process Logic

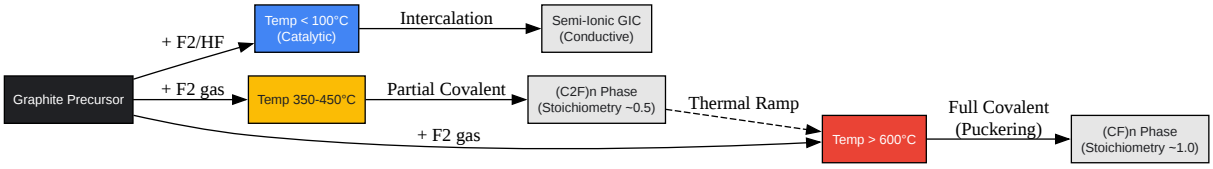

Click to download full resolution via product page

Figure 1: Decision tree for selecting reaction temperature based on the desired stoichiometry and phase.

Module 2: Structural Integrity & Phase Control

Controlling the C-F Bond Nature (Ionic vs. Covalent)

Q: I need a material that is fluorinated but still electrically conductive. My current batches are insulating. A: You have created Covalent

© 2026 BenchChem. All rights reserved.

. You need Semi-Ionic Graphite Intercalation Compounds (GICs).

- The Science: In covalent

  , the carbon rehybridizes from

  (conductive

  -network) to

  (insulating

  -bonds). In semi-ionic GICs, the fluorine sits between layers as ions (

  or

  ), preserving the graphitic

  -system.

- The Protocol:

  - Temperature: Drop reaction temperature to Room Temperature (20–50°C).
  - Catalyst Required: Pure

    reacts slowly at RT. Introduce a volatile fluoride catalyst (e.g.,

    ,

    , or

) to facilitate intercalation without breaking the carbon lattice.

Q: How do I prevent "Thermal Runaway" during synthesis? A: Direct fluorination is highly exothermic (

for C-F bond formation).

- Safety Protocol:

  - Passive Passivation: Never introduce 100%

© 2026 BenchChem. All rights reserved.

to fresh graphite at high temp. Start with a dilute mixture (

) to form a thin fluorinated skin.

- Heat Sinks: Ensure your reactor has active cooling or high thermal mass.
- Packing Density: Avoid over-packing the graphite bed; loose powder allows better heat dissipation and gas flow.

Module 3: Validation & Characterization

How do I prove I made what I think I made?

Do not rely solely on weight gain (gravimetric analysis), as adsorbed

or trapped solvents can skew results. Use X-ray Photoelectron Spectroscopy (XPS) as your gold standard.

XPS Diagnostic Table: The Fingerprint of Fluorination

Feature	Binding Energy (eV)	Interpretation	Actionable Insight
C1s (Graphite)	284.5	C-C bonds	Unreacted core or GIC regions.
C1s (Semi-Ionic)	287.0 – 288.5	C-F semi-ionic	Conductive GIC phase present.
C1s (Covalent)	290.0 – 290.4	C-F covalent	Target for insulating .
C1s (Perfluoro)	292.0 – 292.5	/	Defects, edges, or over-fluorination (structure damage).
F1s (Semi-Ionic)	686.0 – 687.0	Intercalated F	Indicates mobile fluorine species.
F1s (Covalent)	689.0 – 689.5	Bonded F	Indicates stable, hydrophobic lattice.

© 2026 BenchChem. All rights reserved.

Visualization: Structure vs. Properties

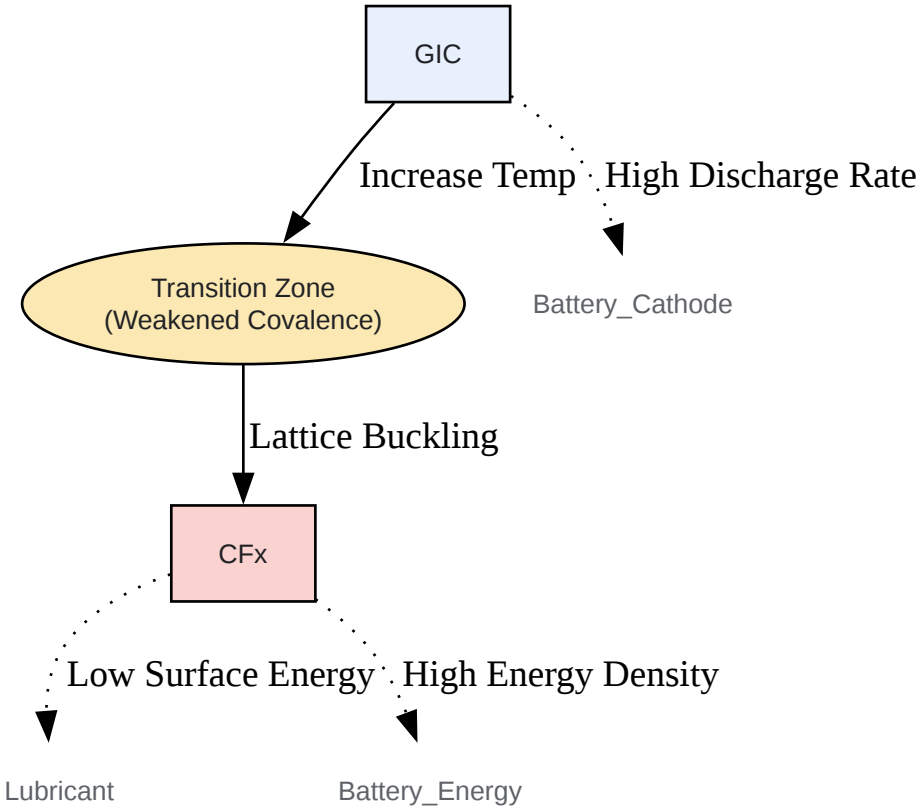

Click to download full resolution via product page

Figure 2: Evolution of properties as the C-F bond transitions from semi-ionic to covalent.

Module 4: Common Troubleshooting Scenarios

Scenario 1: The "Exfoliation" Problem

- Issue: User attempts to disperse fluorinated graphite in solvent, but it won't exfoliate into single layers (Fluorographene).
- Diagnosis: Covalent

  layers have lower surface energy but are tightly stacked.
- Solution: Use a solvent-assisted exfoliation with polar aprotic solvents (e.g., Sulfolane, NMP) or switch to a precursor with "weakened covalence" (synthesized at slightly lower temps,

© 2026 BenchChem. All rights reserved.

~350°C), which weakens the van der Waals forces between layers.

Scenario 2: The "Voltage Drop" in Batteries

- Issue: Using

  as a cathode in Li-primary batteries, but the initial voltage delay is too high.

- Diagnosis: The material is too insulating (pure covalent

).

- Solution: Create a hybrid material. Stop fluorination at

  or mechanically blend with conductive carbon. Alternatively, use a "sub-fluorinated" material (

) to maintain some

  domains for electron transport.

References

- Mechanism of Fluorination & Bonding
  - Tunable Synthesis of Predominant Semi-Ionic and Covalent Fluorine Bonding States.[1] (2019). Nanomaterials. Link
- XPS Characterization Standards
  - XPS spectra and XPS-peak-differentiation-imitating of C1s and F1s peaks. (2020).[2][3] ResearchGate.[4] Link
- Synthesis Parameters (Temp vs. Ratio)
  - Preparation and Applications of Fluorinated Graphenes.[1][5][6] (2021).[7] Molecules. Link
- Reaction Kinetics & Safety
  - Graphite Fluorides.[1][2][3][4][7][8][9][10][11][12][13] (1988).[1][8] Watanabe, N., Nakajima, T., Touhara, H. Elsevier Science. (Seminal Text).

© 2026 BenchChem. All rights reserved.

Need Custom Synthesis?

BenchChem offers custom synthesis for rare earth carbides and specific isotopiclabeling.

Email: info@benchchem.com or Request Quote Online.

Sources

- 1. Tunable Synthesis of Predominant Semi-Ionic and Covalent Fluorine Bonding States on a Graphene Surface - PMC [pmc.ncbi.nlm.nih.gov]
- 2. researchgate.net [researchgate.net]
- 3. Frontiers | KOH modification of fluorinated graphite and its reaction mechanism [frontiersin.org]
- 4. researchgate.net [researchgate.net]
- 5. researchgate.net [researchgate.net]
- 6. Two-Dimensional Fluorinated Graphene: Synthesis, Structures, Properties and Applications - PMC [pmc.ncbi.nlm.nih.gov]
- 7. mdpi.com [mdpi.com]
- 8. papers.ssrn.com [papers.ssrn.com]
- 9. nanotechnology.hu [nanotechnology.hu]
- 10. researchgate.net [researchgate.net]
- 11. mdpi.com [mdpi.com]
- 12. pubs.acs.org [pubs.acs.org]
- 13. ijsea.com [ijsea.com]
- To cite this document: BenchChem. [Carbon-Fluorine Engineering Hub: Precision Control of Graphite Fluorination]. BenchChem, [2026]. [Online PDF]. Available at: [https://www.benchchem.com/product/b086590#controlling-the-degree-of-fluorination-in-graphite-compounds]

Disclaimer & Data Validity:

The information provided in this document is for Research Use Only (RUO) and is strictly not intended for diagnostic or therapeutic procedures. While BenchChem strives to provide

accurate protocols, we make no warranties, express or implied, regarding the fitness of this product for every specific experimental setup.

Technical Support: The protocols provided are for reference purposes. Unsure if this reagent suits your experiment? [Contact our Ph.D. Support Team for a compatibility check]

Need Industrial/Bulk Grade? Request Custom Synthesis Quote

BenchChem

Our mission is to be the trusted global source of essential and advanced chemicals, empowering scientists and researchers to drive progress in science and industry.

Contact

Address: 3281 E Guasti Rd

Ontario, CA 91761, United States

Phone: (601) 213-4426

Email: info@benchchem.com

© 2026 BenchChem. All rights reserved.