A Comparative Guide to the Electrochemical Characterization of Thiophene-Based Conducting Polymers

Author: BenchChem Technical Support Team. **Date**: April 2026

Compound of Interest

Compound Name:	*2-Bromo-5-(2-nitro-vinyl)-thiophene*
Cat. No.:	*B8585142*

Get Quote

This guide provides a comparative analysis of the electrochemical properties of functionalized polythiophenes, with a focus on methodologies relevant to the characterization of novel thiophene-based polymers such as poly(**2-Bromo-5-(2-nitro-vinyl)-thiophene**). Due to the limited specific data on this particular polymer, this guide draws comparisons with well-studied and representative conducting polymers, including various polythiophene derivatives, polypyrrole (PPy), and polyaniline (PANI).

Comparative Electrochemical Performance

The electrochemical behavior of conducting polymers is paramount for their application in sensors, electronic devices, and energy storage. Key performance indicators include electrical conductivity, redox potentials, and electrochemical stability. The following table summarizes these properties for selected conducting polymers.

© 2026 BenchChem. All rights reserved.

Polymer	Monomer Structure	Polymer Structure	Typical Conductivity (S/cm)	Oxidation Potential (V vs. Ag/AgCl)	Reduction Potential (V vs. Ag/AgCl)	Key Characteristics & Applications
Poly(3,4-ethylenedioxythiophene) (PEDOT)	3,4-Ethylenedioxythiophene	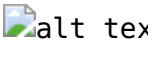	100 - 1000[1]	~0.8 - 1.2	~0.4 - 0.8	High conductivity, excellent stability, and optical transparency. Widely used in transparent electrodes, anti-static coatings, and bioelectronics.[1][2]
Poly(3-hexylthiophene) (P3HT)	3-Hexylthiophene	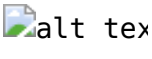	1 - 100	~0.6 - 1.0	~0.2 - 0.5	Good solubility and processability, widely studied for organic photovoltaics and field-effect transistors.[3]
Polypyrrole (PPy)	Pyrrole	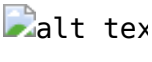	10 - 200[4]	~0.7 - 1.1	~0.1 - 0.4	Good environmental stability

© 2026 BenchChem. All rights reserved.

						and biocompatibility. Used in biosensors, drug delivery, and supercapacitors.[3][4]
Polyaniline (PANI)	Aniline	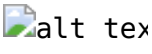	1 - 50[4]	Multiple redox states	Multiple redox states	Unique pH-switching properties and good environmental stability. Applications in sensors, corrosion protection, and electrochromic devices.[3][4]
Polythiophene (PTh)	Thiophene	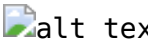	1 - 100[5]	~1.0 - 1.4	~0.3 - 0.6	The parent polymer of a large class of conducting polymers. Its derivatives are often used to

© 2026 BenchChem. All rights reserved.

	enhance properties. [2][5]

Note: The electrochemical properties of poly(**2-Bromo-5-(2-nitro-vinyl)-thiophene**) are expected to be influenced by the electron-withdrawing nitro group and the bromo substituent, which would likely affect its oxidation potential and conductivity compared to unsubstituted polythiophene.

Experimental Protocols for Electrochemical Characterization

A thorough electrochemical characterization is crucial for understanding the performance and potential applications of a new conducting polymer. Below are detailed methodologies for key experiments.

Cyclic voltammetry is a fundamental technique to probe the redox behavior of the polymer.

- Objective: To determine the oxidation and reduction potentials, assess electrochemical stability, and estimate the electrochemical band gap.
- Experimental Setup:
  - Working Electrode: A glassy carbon, platinum, or gold electrode coated with the polymer film.
  - Reference Electrode: Silver/silver chloride (Ag/AgCl) or a saturated calomel electrode (SCE).
  - Counter Electrode: A platinum wire or carbon rod.
  - Electrolyte: A solution of a supporting electrolyte (e.g., 0.1 M tetrabutylammonium perchlorate (TBAP) in acetonitrile or an aqueous buffer) that is electrochemically inert within the potential window of interest.
- Procedure:

© 2026 BenchChem. All rights reserved.

- The polymer is typically electropolymerized onto the working electrode by cycling the potential in a solution containing the monomer.
- After polymerization, the polymer-coated electrode is rinsed and transferred to a fresh electrolyte solution (monomer-free).
- The potential is swept linearly from a starting potential to a vertex potential and then back. This is repeated for several cycles.
- The resulting current is plotted against the applied potential to obtain a cyclic voltammogram.

- Data Analysis:
  - The potentials of the anodic and cathodic peaks correspond to the oxidation and reduction processes.
  - The stability of the polymer can be assessed by observing the change in the peak currents over multiple cycles.
  - The HOMO and LUMO energy levels can be estimated from the onset oxidation and reduction potentials, respectively.

EIS is a powerful technique to study the charge transfer and transport properties of the polymer film.

- Objective: To determine the charge transfer resistance, double-layer capacitance, and bulk conductivity of the polymer.
- Experimental Setup: Same as for cyclic voltammetry.
- Procedure:
  - The polymer-coated electrode is immersed in the electrolyte solution.
  - A small amplitude AC potential is applied over a range of frequencies, and the resulting current and phase shift are measured.

© 2026 BenchChem. All rights reserved.

- The data is typically plotted as a Nyquist plot (imaginary impedance vs. real impedance).

- Data Analysis:
  - The Nyquist plot is fitted to an equivalent circuit model to extract parameters such as the solution resistance (Rs), charge transfer resistance (Rct), and double-layer capacitance (Cdl).
  - The charge transfer resistance provides information about the kinetics of the redox process at the electrode-polymer interface.

This technique combines electrochemical measurements with UV-Vis or other spectroscopic methods to study the changes in the electronic structure of the polymer as a function of its oxidation state.

- Objective: To observe the evolution of electronic absorption bands upon doping and de-doping and to identify the charge carriers (polarons and bipolarons).
- Experimental Setup: A specialized cell that allows for simultaneous electrochemical control and spectroscopic measurement. An optically transparent electrode (e.g., indium tin oxide (ITO) coated glass) is typically used as the working electrode.
- Procedure:
  - The polymer film is deposited on the transparent working electrode.
  - A series of potentials are applied to the electrode, and the corresponding absorption spectra are recorded at each potential.
- Data Analysis:
  - Changes in the absorption spectra, such as the appearance of new bands at lower energies, indicate the formation of polarons and bipolarons, which are the charge carriers in the conducting state.

Visualizing Experimental Workflows

© 2026 BenchChem. All rights reserved.

The following diagrams illustrate the logical flow of the electrochemical characterization process.

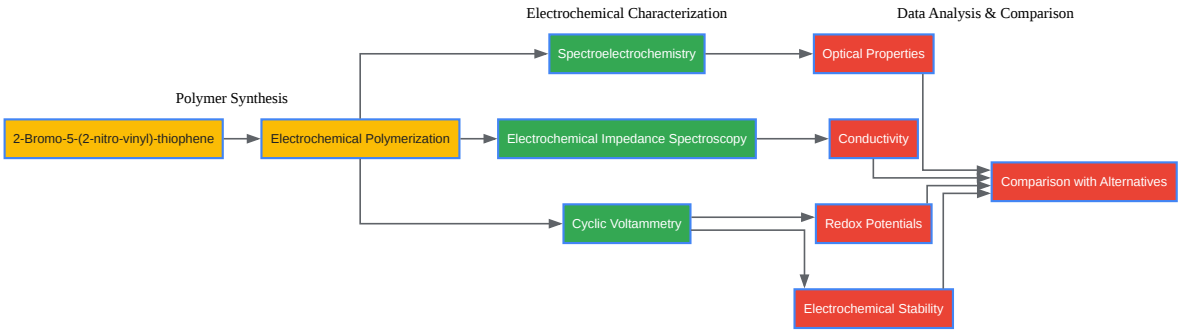

Click to download full resolution via product page

Caption: Workflow for the synthesis and electrochemical characterization of a novel conducting polymer.

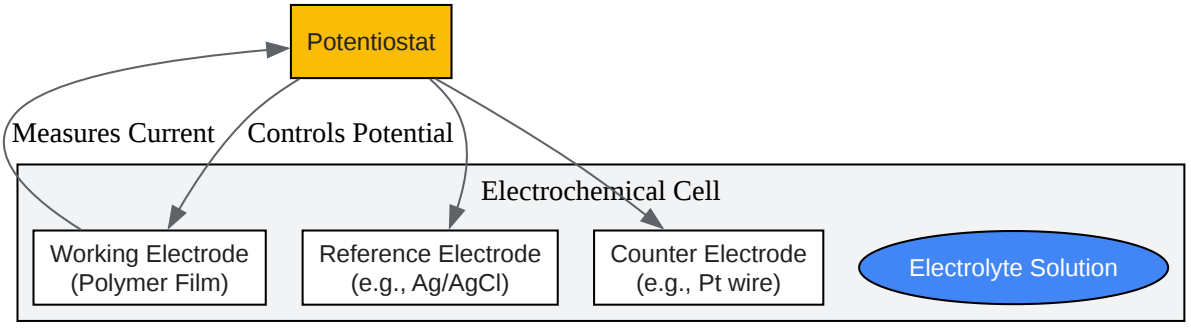

© 2026 BenchChem. All rights reserved.

Click to download full resolution via product page

Caption: Schematic of a three-electrode setup for cyclic voltammetry.

Need Custom Synthesis?

BenchChem offers custom synthesis for rare earth carbides and specific isotopiclabeling.

Email: info@benchchem.com or Request Quote Online.

References

- 1. mdpi.com [mdpi.com]
- 2. researchgate.net [researchgate.net]
- 3. Recent Advances in Conductive Polymers-Based Electrochemical Sensors for Biomedical and Environmental Applications [mdpi.com]
- 4. pubs.acs.org [pubs.acs.org]
- 5. researchgate.net [researchgate.net]
- To cite this document: BenchChem. [A Comparative Guide to the Electrochemical Characterization of Thiophene-Based Conducting Polymers]. BenchChem, [2026]. [Online PDF]. Available at: [https://www.benchchem.com/product/b8585142/docs#a-comparative-guide-to-the-electrochemical-characterization-of-thiophene-based-conducting-polymers]

Disclaimer & Data Validity:

The information provided in this document is for Research Use Only (RUO) and is strictly not intended for diagnostic or therapeutic procedures. While BenchChem strives to provide accurate protocols, we make no warranties, express or implied, regarding the fitness of this product for every specific experimental setup.

Technical Support: The protocols provided are for reference purposes. Unsure if this reagent suits your experiment?

Need Industrial/Bulk Grade? Request Custom Synthesis Quote

BenchChem

Our mission is to be the trusted global source of essential and advanced chemicals, empowering scientists and researchers to drive progress in science and industry.

Contact

Address: 3281 E Guasti Rd

Ontario, CA 91761, United States

Phone: (601) 213-4426

Email: info@benchchem.com

Contact our Ph.D. Support Team for a compatibility check

© 2026 BenchChem. All rights reserved.