Application Note: Precision Synthesis of Amphiphilic Hydrogels using 2-Hydroxyethyl 2-bromopropionate

Author: BenchChem Technical Support Team. **Date**: April 2026

Compound of Interest

Compound Name:	*2-Hydroxyethyl 2-Bromopropionate*
CAS No.:	*208446-93-9*
Cat. No.:	*B8555588*

Get Quote

Strategic Rationale & Mechanism

The Dual-Function Advantage

2-Hydroxyethyl 2-bromopropionate (HEBP) is a bifunctional initiator containing a primary hydroxyl group (

) and a secondary bromine atom (

). This unique structure allows for the sequential combination of two distinct polymerization mechanisms:

- Ring-Opening Polymerization (ROP): The hydroxyl group initiates the ROP of cyclic esters (e.g.,

  -caprolactone, lactide), creating a hydrophobic biodegradable backbone.

© 2026 BenchChem. All rights reserved.

- Atom Transfer Radical Polymerization (ATRP): The bromine moiety serves as the initiation site for the ATRP of vinyl monomers (e.g., acrylates, methacrylates), growing a hydrophilic corona.

Mechanistic Pathway

The resulting A-B amphiphilic block copolymer self-assembles in aqueous environments. The hydrophobic segments (A-block) aggregate to form micellar cores (physical crosslinks), while the hydrophilic segments (B-block) swell to form the hydrogel matrix.

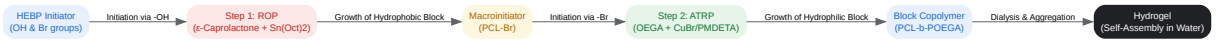

Click to download full resolution via product page

Figure 1: Sequential synthesis pathway transforming HEBP into a physical hydrogel network.

Experimental Protocol

Phase A: Synthesis of PCL-Br Macroinitiator (ROP)

Objective: Create a hydrophobic Poly(

-caprolactone) chain terminated with a bromine atom active for ATRP.

Reagents:

- Initiator: **2-Hydroxyethyl 2-bromopropionate** (HEBP)
- Monomer:

  -Caprolactone (

  -CL) (Dried over

  and distilled)
- Catalyst: Tin(II) 2-ethylhexanoate (

)

© 2026 BenchChem. All rights reserved.

- Solvent: Toluene (Anhydrous) or Bulk (Solvent-free)

Step-by-Step Methodology:

- Preparation: In a flame-dried Schlenk flask equipped with a magnetic stir bar, add HEBP (1.0 eq) and

  -CL (target DP, e.g., 50 eq).

- Catalyst Addition: Add

  (0.1 mol% relative to monomer) under a dry nitrogen stream.

- Deoxygenation: Perform three freeze-pump-thaw cycles to remove oxygen and moisture.

- Polymerization: Immerse the flask in an oil bath at 110°C for 24 hours.
  - Expert Insight: Bulk polymerization is preferred for PCL to minimize solvent waste and maximize reaction rate.

- Purification:
  - Cool the reaction to room temperature.[1]
  - Dissolve the viscous melt in a minimal amount of THF.
  - Precipitate dropwise into excess cold methanol/hexane (1:1 v/v).
  - Filter and dry under vacuum at room temperature for 24h.

- Validation:

  NMR (

) should show the PCL backbone signals (

  4.06 ppm,

  2.30 ppm) and the retention of the

  -bromo ester proton (

© 2026 BenchChem. All rights reserved.

4.3-4.4 ppm).

Phase B: Synthesis of PCL-b-POEGA Hydrogel Precursor (ATRP)

Objective: Grow the hydrophilic Poly(oligo(ethylene glycol) acrylate) block. Note: We select Acrylate (OEGA) over Methacrylate (OEGMA) because HEBP is a secondary bromide, which initiates acrylates more efficiently than methacrylates, yielding lower dispersity (Đ).

Reagents:

- Macroinitiator: PCL-Br (from Phase A)
- Monomer: Oligo(ethylene glycol) methyl ether acrylate (OEGA,

)
- Catalyst: CuBr (Purified/washed with acetic acid)
- Ligand: PMDETA (N,N,N',N'',N''-pentamethyldiethylenetriamine)
- Solvent: Anisole or Toluene

Step-by-Step Methodology:

- Charge: Add PCL-Br (1 eq) and OEGA (target DP, e.g., 100 eq) to a Schlenk flask. Dissolve in Anisole (50% v/v solids).
- Ligand Addition: Add PMDETA (1 eq relative to PCL-Br).
- Degassing: Seal the flask and purge with

  for 20 minutes (or freeze-pump-thaw).
- Catalyst Activation: Carefully add CuBr (1 eq) under rapid

  flow. The solution should turn light green/blue (depending on complex).
  - Critical Control: The ratio [PCL-Br]:[CuBr]:[PMDETA] should be 1:1:1.

© 2026 BenchChem. All rights reserved.

- Reaction: Heat to 60-70°C. Monitor conversion via NMR or GPC. Stop at 80% conversion to preserve end-group fidelity.
- Purification:
  - Dilute with THF.
  - Pass through a neutral alumina column to remove the copper catalyst (solution turns from green/blue to colorless).
  - Precipitate into cold diethyl ether or hexane.
  - Dry under vacuum.[2]

Phase C: Hydrogel Formation (Self-Assembly)

- Dissolution: Dissolve the PCL-b-POEGA block copolymer in THF (a common solvent for both blocks) at a concentration of 10-20 wt%.
- Dialysis (The Gelation Step):
  - Place the solution in a dialysis bag (MWCO 3.5 kDa).
  - Dialyze against deionized water for 3 days, changing water every 6 hours.
  - Mechanism:[3][4][5] As THF leaves and water enters, the hydrophobic PCL blocks collapse into micellar cores. At sufficient concentration (>15-20 wt%), these micelles pack or bridge to form a physical hydrogel.
- Sterilization (Optional): The resulting hydrogel can be sterilized via UV irradiation or filtration of the polymer solution prior to dialysis.

Quantitative Data & Formulation Table

Table 1: Typical Formulation Ratios for PCL-b-POEGA Hydrogel

© 2026 BenchChem. All rights reserved.

Component	Role	Molar Eq.[5][6][7][8][9][10]	Mass (Example)	Critical Parameter
HEBP	Initiator	1.0	0.197 g	Purity >98%
-Caprolactone	Hydrophobic Monomer	50.0	5.70 g	Anhydrous
Sn(Oct)2	ROP Catalyst	0.05	~20 mg	Moisture Sensitive
OEGA (480)	Hydrophilic Monomer	100.0	48.0 g	Remove inhibitor
CuBr	ATRP Catalyst	1.0	0.143 g	Cu(I) state essential

Experimental Workflow Diagram

© 2026 BenchChem. All rights reserved.

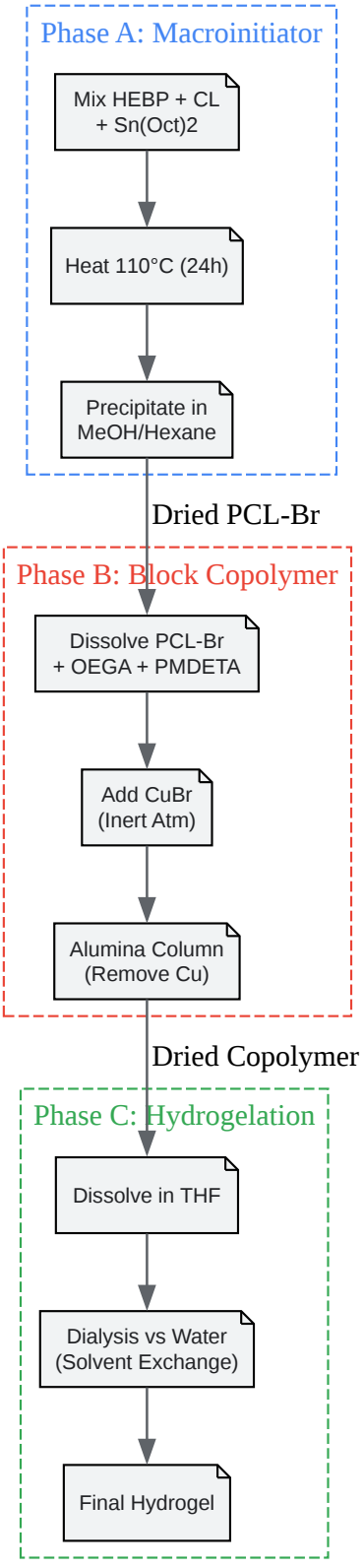

Click to download full resolution via product page

Figure 2: Step-by-step experimental workflow from monomer to hydrogel.

© 2026 BenchChem. All rights reserved.

Critical Troubleshooting & Expertise

Initiation Efficiency (Halide Choice)

- Issue: HEBP contains a secondary bromine (propionate type).
- Risk: If polymerizing methacrylates (like HEMA or PEGMA), the propagation rate is much faster than initiation, leading to high dispersity (

).
- Solution:
  - Preferred: Use Acrylates (e.g., Poly(ethylene glycol) acrylate, PEGA) as the second block. The reactivity matches the secondary bromide initiator perfectly.
  - Alternative: If Methacrylates are required, perform Halogen Exchange by adding CuCl (instead of CuBr) or using a mixed halide system to slow down propagation relative to initiation.

Catalyst Removal

- Issue: Residual Copper is cytotoxic.
- Protocol: Passing the polymer solution through neutral alumina is standard. For biomedical applications, subsequent dialysis against EDTA solution (0.1 M) is recommended to strip trace copper ions before the final water dialysis.

Hydrogel Stability

- These are physical hydrogels held together by hydrophobic interactions. They are reversible. If the solution is diluted below the Critical Gelation Concentration (CGC), the gel will dissolve into micelles. For permanent gels, add a divinyl crosslinker (e.g., Poly(ethylene glycol) diacrylate) during the ATRP step.

References

- Matyjaszewski, K., & Tsarevsky, N. V. (2014). Macromolecular Engineering by Atom Transfer Radical Polymerization. Journal of the American Chemical Society. [Link]

© 2026 BenchChem. All rights reserved.

- Siegwart, D. J., Oh, J. K., & Matyjaszewski, K. (2012). ATRP in the design of functional materials for biomedical applications.[6][7][9][11][12] Progress in Polymer Science. [Link]
- Lutz, J. F., & Matyjaszewski, K. (2009). Nuclear Magnetic Resonance Monitoring of Atom Transfer Radical Polymerization. Macromolecular Chemistry and Physics. [Link][5]
- Agut, W., Brulet, A., Schatz, C., Taton, D., & Lecommandoux, S. (2010). pH and Temperature Responsive Polymeric Micelles and Polymersomes by Self-Assembly of Poly[2-(dimethylamino)ethyl methacrylate]-b-poly(glutamic acid) Double Hydrophilic Block Copolymers. Langmuir. [Link] (Demonstrates the block copolymer self-assembly principles applicable here).

Need Custom Synthesis?

BenchChem offers custom synthesis for rare earth carbides and specific isotopiclabeling.

Email: info@benchchem.com or Request Quote Online.

Sources

- 1. mdpi.com [mdpi.com]
- 2. research-collection.ethz.ch [research-collection.ethz.ch]
- 3. Fundamental Concepts of Hydrogels: Synthesis, Properties, and Their Applications - PMC [pmc.ncbi.nlm.nih.gov]
- 4. researchgate.net [researchgate.net]
- 5. pubs.acs.org [pubs.acs.org]
- 6. Surface-Initiated Atom Transfer Radical Polymerization for the Preparation of Well-Defined Organic–Inorganic Hybrid Nanomaterials - PMC [pmc.ncbi.nlm.nih.gov]
- 7. researchgate.net [researchgate.net]
- 8. polymer.chem.cmu.edu [polymer.chem.cmu.edu]
- 9. researchgate.net [researchgate.net]
- 10. Synthesis of amphiphilic copolymers of N-Vinyl-2-pyrrolidone capable of self-assembly and thermotropic formation of nanoparticles [publichealthtoxicology.com]
- 11. mdpi.com [mdpi.com]

© 2026 BenchChem. All rights reserved.

- 12. pubs.aip.org [pubs.aip.org]
- To cite this document: BenchChem. [Application Note: Precision Synthesis of Amphiphilic Hydrogels using 2-Hydroxyethyl 2-bromopropionate]. BenchChem, [2026]. [Online PDF]. Available at: [https://www.benchchem.com/product/b8555588/docs#application-note-precision-synthesis-of-amphiphilic-hydrogels-using-2-hydroxyethyl-2-bromopropionate]

Disclaimer & Data Validity:

The information provided in this document is for Research Use Only (RUO) and is strictly not intended for diagnostic or therapeutic procedures. While BenchChem strives to provide accurate protocols, we make no warranties, express or implied, regarding the fitness of this product for every specific experimental setup.

Technical Support: The protocols provided are for reference purposes. Unsure if this reagent suits your experiment?

Need Industrial/Bulk Grade? Request Custom Synthesis Quote

BenchChem

Our mission is to be the trusted global source of essential and advanced chemicals, empowering scientists and researchers to drive progress in science and industry.

Contact

Address: 3281 E Guasti Rd

Ontario, CA 91761, United States

Phone: (601) 213-4426

Email: info@benchchem.com

Contact our Ph.D. Support Team for a compatibility check