Technical Analysis of Z-Ile-Ala-OH: Structural Characterization and Analytical Methodologies

Author: BenchChem Technical Support Team. **Date**: March 2026

Compound of Interest		
Compound Name:	*Z-Ile-Ala-OH*	
CAS No.:	*24787-83-5*	
Cat. No.:	*B8513123*	*Get Quote*

Executive Summary & Molecule Profile[1]

Z-Ile-Ala-OH (N-Benzyloxycarbonyl-L-isoleucyl-L-alanine) represents a critical dipeptide intermediate in the synthesis of bioactive peptidomimetics and protease inhibitors. Structurally, it serves as a model substrate for metalloproteases (e.g., thermolysin) due to the hydrophobic bulk of the isoleucine side chain and the steric accessibility of the alanine residue.

This technical guide provides a rigorous structural analysis and validated analytical workflows for researchers utilizing **Z-Ile-Ala-OH**. The focus is on distinguishing this specific sequence from its isomers (e.g., Z-Ala-Ile-OH) and quantifying diastereomeric purity, a frequent challenge in isoleucine-containing peptides due to the two chiral centers in the isoleucine residue itself (

and

).

Physicochemical Profile[1][2][3][4][5][6][7][8][9]

© 2026 BenchChem. All rights reserved.

Property	Specification
Chemical Name	N-[(Phenylmethoxy)carbonyl]-L-isoleucyl-L-alanine
Molecular Formula	
Molecular Weight	336.38 g/mol
Monoisotopic Mass	336.1685 Da
Appearance	White to off-white crystalline powder
Solubility	Soluble in DMSO, DMF, Methanol; Sparingly soluble in Water; Insoluble in Hexanes
pKa (Calc.)	~3.6 (Carboxylic Acid), ~8.0 (Amide - typically neutral)

Structural Elucidation: Spectroscopic Signatures

The validation of **Z-Ile-Ala-OH** requires a multi-modal approach to confirm connectivity, stereochemistry, and purity.

A. Nuclear Magnetic Resonance (NMR) Spectroscopy

NMR is the definitive method for confirming the peptide sequence and the integrity of the Z-protecting group. The isoleucine residue presents a unique diagnostic challenge due to the diastereotopic protons on the

-carbon.

Predicted

H NMR Assignments (500 MHz, DMSO-

)

© 2026 BenchChem. All rights reserved.

Residue / Group	Proton ( )	(ppm)	Multiplicity	Integral	Diagnostic Note
Z-Group	Aromatic Ring	7.30 – 7.40	Multiplet	5H	Overlapping phenyl protons; confirms Z-group presence.
Z-Group	Benzylic	5.03	Singlet (or ABq)	2H	Characteristic sharp signal; diastereotopic splitting possible if chiral influence is strong.
Amide	Ile-NH	7.45	Doublet	1H	Urethane NH; typically broader or upfield of peptide amide.
Amide	Ala-NH	8.15	Doublet	1H	Sharp doublet (Hz); confirms peptide bond.
Ile	-CH	3.90 – 4.00	Triplet/dd	1H	Coupled to NH and -CH.
Ile	-CH	1.70 – 1.80	Multiplet	1H	Key stereocenter; complex

© 2026 BenchChem. All rights reserved.

					coupling pattern.
Ile	-CH	1.10, 1.45	Multiplet	2H	Diastereotopic protons (distinct environments).
Ile	-CH	0.85	Doublet	3H	Attached to -CH.
Ile	-CH	0.80	Triplet	3H	Terminal methyl of ethyl group; often overlaps with -CH .
Ala	-CH	4.20 – 4.30	Quintet	1H	Characteristic coupling to methyl doublet.
Ala	-CH	1.25	Doublet	3H	High intensity doublet; diagnostic for Alanine.
C-Term	-COOH	> 12.0	Broad Singlet	1H	Often invisible due to exchange with solvent water.

Technical Insight: In DMSO-

© 2026 BenchChem. All rights reserved.

, the amide protons are usually distinct. If using

, amide protons will exchange and disappear. The key to distinguishing **Z-Ile-Ala-OH** from Z-Ala-Ile-OH is the NOESY (Nuclear Overhauser Effect) correlation between the Z-group benzylic protons and the Ile-NH, versus the Ala-NH.

B. Mass Spectrometry (MS) Fragmentation

Electrospray Ionization (ESI) in positive mode (

) is the standard. Tandem MS (MS/MS) provides sequence confirmation.

Fragmentation Pathway:

- Precursor:

  337.2 (

)

- Primary Loss:

  91.0 (Tropylium ion,

) – Characteristic of Z-group.

- b-ion Formation: Cleavage of the Ile-Ala peptide bond yields the

  ion (Z-Ile acylium ion) at

  248.

- y-ion Formation: Cleavage yields the

  ion (Ala) at

  90.

© 2026 BenchChem. All rights reserved.

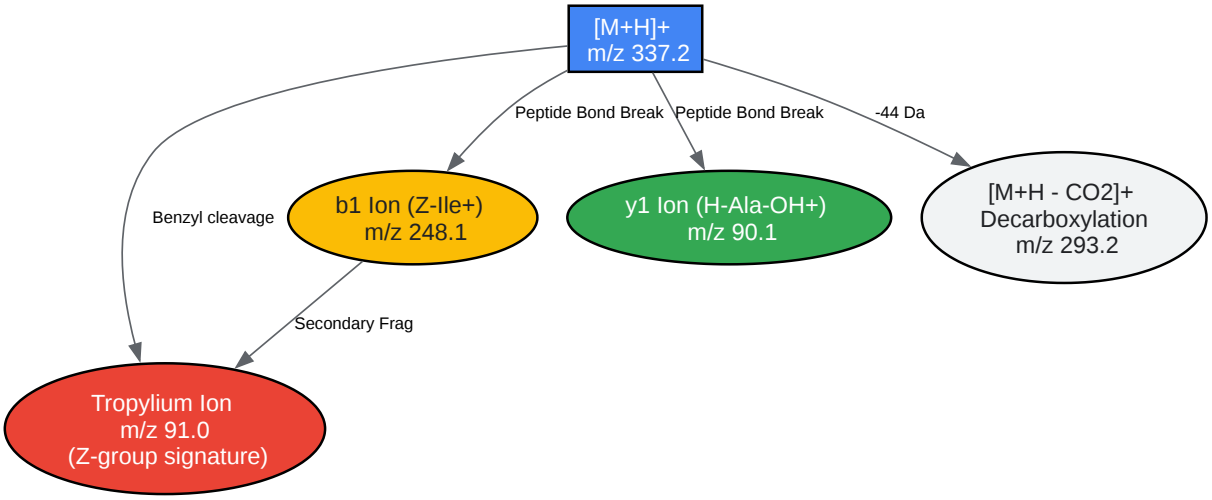

Click to download full resolution via product page

Figure 1: ESI-MS/MS Fragmentation Pathway for **Z-Ile-Ala-OH**. The presence of m/z 91 confirms the Z-group, while the b1/y1 split confirms the sequence order.

Analytical Methodologies: Validated Protocols

A. High-Performance Liquid Chromatography (HPLC)

Separation of **Z-Ile-Ala-OH** from synthetic impurities (e.g., Z-Ile-OH, free Ala, or diastereomers) requires a C18 Reverse Phase method.

Method Parameters:

- Column: C18,

  mm, 3.5 µm or 5 µm particle size (e.g., Agilent Zorbax or Waters XBridge).

- Mobile Phase A: 0.1% Trifluoroacetic acid (TFA) in Water (Milli-Q).

- Mobile Phase B: 0.1% TFA in Acetonitrile (ACN).

© 2026 BenchChem. All rights reserved.

- Flow Rate: 1.0 mL/min.
- Temperature: 30°C (Controlled to prevent retention time drift).
- Detection: UV at 214 nm (peptide bond) and 257 nm (phenyl group).
- Gradient:

Time (min)	% Mobile Phase B	Event
0.0	5	Equilibration
2.0	5	Load
20.0	65	Linear Gradient
22.0	95	Wash
25.0	95	Hold
25.1	5	Re-equilibration

Critical Control Point: Isoleucine contains two chiral centers. Standard synthesis using L-Ile can contain trace D-allo-Ile. This diastereomer (Z-D-allo-Ile-Ala-OH) will typically elute immediately adjacent to the main peak. If diastereomeric purity is critical, a slower gradient (0.5% B/min) or a specialized chiral column (e.g., Chiralpak) may be required.

B. Sample Preparation & Stability[2][10]

- Solvent: Dissolve 1 mg/mL in 50:50 Water:Acetonitrile. If solubility is poor, pre-dissolve in minimal DMSO (50 µL) then dilute with Mobile Phase A.
- Filtration: 0.22 µm PTFE filter (Nylon filters may bind hydrophobic peptides).
- Stability: The Z-group is stable to weak acids (TFA) but sensitive to hydrogenolysis (

) and strong acids (HBr/AcOH). Avoid basic conditions (pH > 9) to prevent racemization of the C-terminal Alanine or hydrolysis of the benzyl ester.

Synthesis Logic & Impurity Profiling

© 2026 BenchChem. All rights reserved.

Understanding the synthesis route allows for predictive impurity profiling. **Z-Ile-Ala-OH** is typically synthesized via solution-phase coupling.

Common Synthetic Route:

Potential Impurities:

- Z-Ile-OH: Unreacted starting material (Hydrolysis of active ester).
- Z-Ile-Ile-Ala-OH: Double coupling (rare with OSu esters but possible with DCC).
- Diastereomers: Z-D-Ile-Ala-OH (from racemized starting material).

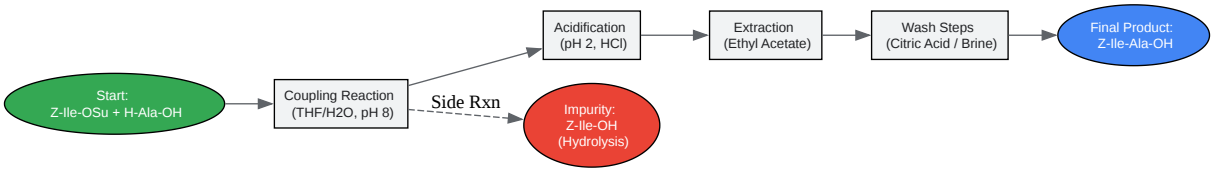

Click to download full resolution via product page

Figure 2: Synthesis workflow and impurity generation points. Proper acidification and washing are crucial to remove unreacted Ala-OH and hydrolyzed Z-Ile-OH.

References

- Gessmann, R., et al. (2023).[1] Z-Ala–Ile-OH, a dipeptide building block suitable for the formation of orthorhombic microtubes.[1][2] Acta Crystallographica Section C. Retrieved from [Link]
- University of Illinois. (1997). NMR Chemical Shifts of Trace Impurities. J. Org.[3] Chem. Retrieved from [Link]
- ChemGuide. (n.d.). Fragmentation Patterns in Mass Spectra. Retrieved from [Link]

© 2026 BenchChem. All rights reserved.

Need Custom Synthesis?

BenchChem offers custom synthesis for rare earth carbides and specific isotopiclabeling.

Email: info@benchchem.com or Request Quote Online.

Sources

- 1. Z-Ala-Ile-OH, a dipeptide building block suitable for the formation of orthorhombic microtubes - PubMed [pubmed.ncbi.nlm.nih.gov]
- 2. journals.iucr.org [journals.iucr.org]
- 3. scs.illinois.edu [scs.illinois.edu]
- To cite this document: BenchChem. [Technical Analysis of Z-Ile-Ala-OH: Structural Characterization and Analytical Methodologies]. BenchChem, [2026]. [Online PDF]. Available at: [https://www.benchchem.com/product/b8513123#chemical-structure-analysis-of-z-ile-ala-oh-dipeptide]

Disclaimer & Data Validity:

The information provided in this document is for Research Use Only (RUO) and is strictly not intended for diagnostic or therapeutic procedures. While BenchChem strives to provide accurate protocols, we make no warranties, express or implied, regarding the fitness of this product for every specific experimental setup.

Technical Support: The protocols provided are for reference purposes. Unsure if this reagent suits your experiment? [Contact our Ph.D. Support Team for a compatibility check]

Need Industrial/Bulk Grade? Request Custom Synthesis Quote

© 2026 BenchChem. All rights reserved.

BenchChem

Our mission is to be the trusted global source of essential and advanced chemicals, empowering scientists and researchers to drive progress in science and industry.

Contact

Address: 3281 E Guasti Rd

Ontario, CA 91761, United States

Phone: (601) 213-4426

Email: info@benchchem.com

© 2026 BenchChem. All rights reserved.