Structure of Paroxetine EP Impurity A Hydrochloride

Author: BenchChem Technical Support Team. **Date**: March 2026

Compound of Interest		
Compound Name:	*Defluoro Paroxetine Hydrochloride*	
Cat. No.:	*B8513724*	Get Quote

Technical Monograph & Characterization Guide

Executive Summary

In the high-stakes environment of SSRI development, Paroxetine EP Impurity A (Desfluoroparoxetine) represents a classic "starting material carryover" challenge. Unlike degradation products formed via hydrolysis or oxidation, Impurity A is a structural analogue introduced early in the synthetic pathway—typically during the Grignard addition.

Its presence is not merely a compliance issue but a direct indicator of raw material quality control. Because it lacks the fluorine atom at the para-position of the phenyl ring, it exhibits physicochemical properties dangerously similar to the Active Pharmaceutical Ingredient (API), making chromatographic separation demanding. This guide provides the definitive structural data and control strategies required for rigorous CMC (Chemistry, Manufacturing, and Controls) documentation.

Structural Identification & Stereochemistry

The core difference between Paroxetine and Impurity A is the absence of the fluorine substituent on the phenyl ring. The stereochemical configuration remains identical to the API: (3S, 4R).

Chemical Identity

© 2026 BenchChem. All rights reserved.

Parameter	Detail
Common Name	Paroxetine EP Impurity A Hydrochloride
Synonyms	Desfluoroparoxetine HCl; Paroxetine USP Related Compound B
IUPAC Name	(3S,4R)-3-[(1,3-benzodioxol-5-yloxy)methyl]-4-phenylpiperidine hydrochloride
CAS Number	1394842-91-1 (HCl Salt); 324024-00-2 (Free Base)
Molecular Formula	$C_{19}H_{21}NO_3$[1][2][3][4][5][6][7][8][9][10][11] · HCl
Molecular Weight	347.84 g/mol (Salt); 311.38 g/mol (Base)
Monograph Status	Listed in European Pharmacopoeia (EP) and USP

Structural Visualization

The following diagram illustrates the precise connectivity and stereochemistry of the impurity. Note the unsubstituted phenyl ring at the C4 position.

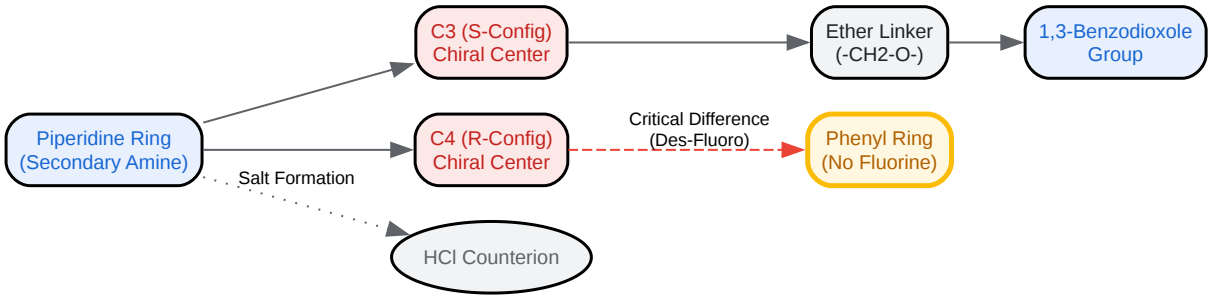

Click to download full resolution via product page

Figure 1: Structural connectivity of Paroxetine EP Impurity A. The orange node highlights the lack of fluorine, the primary differentiator from Paroxetine.

© 2026 BenchChem. All rights reserved.

Origin & Formation Pathway

Understanding the causality of Impurity A is essential for prevention. It is rarely generated during the reaction itself (e.g., via reductive defluorination) but is almost exclusively introduced via contaminated starting materials.

The "Grignard Carryover" Mechanism

The synthesis of Paroxetine typically involves the reaction of Arecoline (or a similar precursor) with 4-fluorophenylmagnesium bromide.

- The Flaw: If the magnesium or bromobenzene used to generate the Grignard reagent contains trace amounts of benzene or bromobenzene (non-fluorinated), Phenylmagnesium bromide is formed.
- The Result: This non-fluorinated Grignard reagent competes with the fluorinated species, integrating inextricably into the piperidine scaffold.

© 2026 BenchChem. All rights reserved.

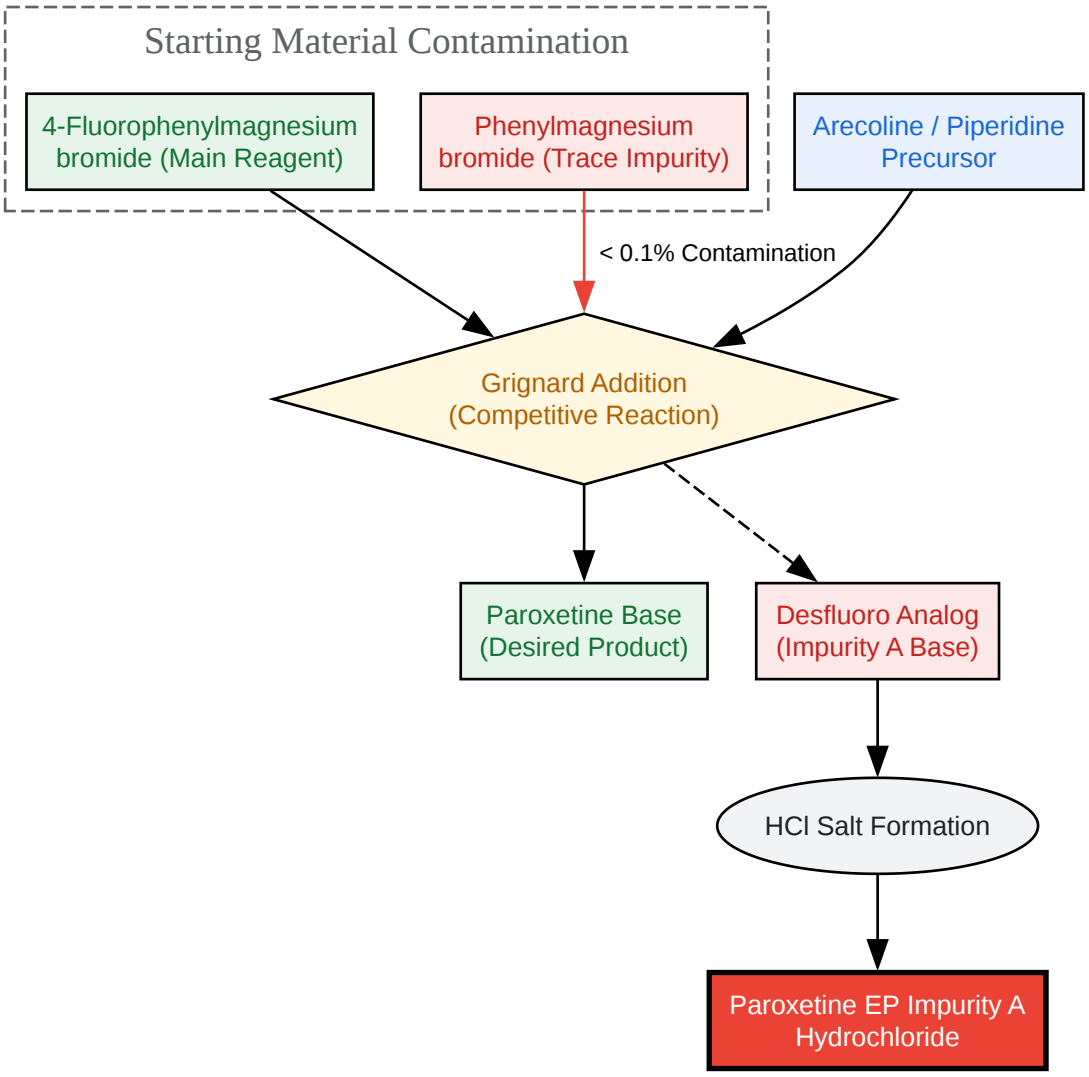

Click to download full resolution via product page

Figure 2: Competitive Grignard addition pathway. Impurity A tracks with the API through subsequent steps due to structural similarity.

Analytical Profiling & Detection

Differentiating Impurity A from Paroxetine requires high-resolution techniques because their retention times and solubilities are nearly identical.

HPLC/UPLC Detection

The European Pharmacopoeia (EP) mandates strict resolution criteria.

© 2026 BenchChem. All rights reserved.

- Method: Reverse Phase HPLC (C18 or C8 column).
- Challenge: Impurity A elutes very close to Paroxetine. The absence of fluorine slightly increases the lipophilicity (or alters interaction with the stationary phase depending on pH), often causing it to elute after Paroxetine in many standard acidic mobile phases.
- Detection Wavelength: 295 nm (The benzodioxole chromophore remains intact).

Mass Spectrometry (LC-MS)

Mass spectrometry provides the most definitive confirmation.

- Paroxetine (M+H): m/z ~330.15
- Impurity A (M+H): m/z ~312.16
- Differentiation: The mass difference of 18 Da (Fluorine [19] replaced by Hydrogen [1]) is the diagnostic signature.

NMR Spectroscopy

Nuclear Magnetic Resonance confirms the absence of the Fluorine-Carbon coupling.

Feature	Paroxetine (API)	Impurity A
^{1}H NMR (Aromatic Region)	Multiplet for 4 protons (disubstituted ring).	Multiplet for 5 protons (monosubstituted phenyl ring).
^{13}C NMR	Distinct C-F coupling (doublets) observed for phenyl carbons.	No C-F coupling; sharp singlets for phenyl carbons.
^{19}F NMR	Strong signal at ~ -115 to -120 ppm.	Silent (No signal).

Control Strategy (The "Self-Validating" Protocol)

To ensure Impurity A remains below the ICH Q3A threshold (typically <0.15%), you cannot rely solely on purification. The control must be upstream.

© 2026 BenchChem. All rights reserved.

Step 1: Raw Material Qualification (RMQ)

Protocol: Implement a GC-MS screen for the Grignard precursor (Bromobenzene).

- Acceptance Criteria: Benzene/Chlorobenzene content in 4-Fluorobromobenzene must be < 0.05%.
- Why: Once the Desfluoro-Grignard reacts, the resulting Impurity A co-crystallizes with Paroxetine HCl. Recrystallization is inefficient at removing it.

Step 2: In-Process Control (IPC)

Protocol: Analyze the crude intermediate post-Grignard addition using HPLC.

- Action Limit: If Desfluoro-intermediate > 0.10%, reject the batch or divert for high-efficiency preparative chromatography (though often economically unviable).

References

- European Pharmacopoeia (Ph.[12] Eur.). Paroxetine Hydrochloride Hemihydrate Monograph 2016. European Directorate for the Quality of Medicines (EDQM).
- Synchemia Research. Paroxetine EP Impurity A Characterization Data. Synchemia.
- BOC Sciences. Paroxetine EP Impurity A HCl - Product & Safety Data. BOC Sciences.[10]
- Cleanchem Laboratories. Impurity Profiling and Reference Standards for Paroxetine. Cleanchem.[7]
- Munigela, N., et al. (2008).[6][10] "Spectral Characterization of Degradation Impurities of Paroxetine Hydrochloride Hemihydrate". Scientia Pharmaceutica.

Need Custom Synthesis?

BenchChem offers custom synthesis for rare earth carbides and specific isotopiclabeling.

Email: info@benchchem.com or Request Quote Online.

Sources

- 1. mdpi.com [mdpi.com]
- 2. synchemia.com [synchemia.com]
- 3. pharmaceresearch.com [pharmaceresearch.com]
- 4. researchgate.net [researchgate.net]
- 5. glppharmastandards.com [glppharmastandards.com]
- 6. pdfs.semanticscholar.org [pdfs.semanticscholar.org]
- 7. cleanchemlab.com [cleanchemlab.com]
- 8. epichem.com [epichem.com]
- 9. Paroxetine EP Impurity A | CAS No- 1394842-91-1 | Paroxetine USP Related Compound B ; Desfluoroparoxetine [chemicea.com]
- 10. bocsci.com [bocsci.com]
- 11. pdf.benchchem.com [pdf.benchchem.com]
- 12. synthinkchemicals.com [synthinkchemicals.com]

- To cite this document: BenchChem. [Structure of Paroxetine EP Impurity A Hydrochloride]. BenchChem, [2026]. [Online PDF]. Available at: [https://www.benchchem.com/product/b8513724#structure-of-paroxetine-ep-impurity-a-hydrochloride]

Disclaimer & Data Validity:

The information provided in this document is for Research Use Only (RUO) and is strictly not intended for diagnostic or therapeutic procedures. While BenchChem strives to provide accurate protocols, we make no warranties, express or implied, regarding the fitness of this product for every specific experimental setup.

Technical Support: The protocols provided are for reference purposes. Unsure if this reagent suits your experiment? [Contact our Ph.D. Support Team for a compatibility check]

Need Industrial/Bulk Grade? Request Custom Synthesis Quote

© 2026 BenchChem. All rights reserved.

BenchChem

Our mission is to be the trusted global source of essential and advanced chemicals, empowering scientists and researchers to drive progress in science and industry.

Contact

Address: 3281 E Guasti Rd

Ontario, CA 91761, United States

Phone: (601) 213-4426

Email: info@benchchem.com

© 2026 BenchChem. All rights reserved.