In-Depth Technical Guide: 1-Hydroxybenzotriazole Ammonium Salt

Author: BenchChem Technical Support Team. **Date**: April 2026

Compound of Interest

Compound Name:	*1-hydroxybenzotriazole ammonium salt*
Cat. No.:	*B8474530*

Get Quote

Molecular Weight, Chemical Behavior, and Application Protocols

Part 1: Executive Technical Summary

1-Hydroxybenzotriazole (HOBt) ammonium salt is a specialized derivative of the standard peptide coupling additive HOBt. While the parent compound (anhydrous HOBt) is a critical reagent for suppressing racemization in peptide synthesis, it is classified as a Class 1.3C explosive (UN 0508) in its dry form. The ammonium salt variant serves two primary functions: it acts as a desensitized, chemically stable alternative for transport and storage, and it functions as a selective kinase inhibitor in biological assays.

This guide provides the precise physicochemical data, handling protocols, and mechanistic insights required for researchers utilizing this compound in drug development and organic synthesis.

Core Physicochemical Data

© 2026 BenchChem. All rights reserved.

Parameter	Technical Specification
Compound Name	1-Hydroxybenzotriazole ammonium salt
Synonyms	HOBt ammonium salt; 1-Hydroxy-1H-benzotriazole ammonium salt; Ammonium 1-hydroxybenzotriazole
CAS Number	63307-62-0
Molecular Formula	$C_6H_8N_4O$ ($C_6H_5N_3O$[1] · NH_3)
Molecular Weight	152.15 g/mol
Appearance	White to off-white crystalline powder
Solubility	Soluble in water, Methanol, DMF; slightly soluble in DCM
Purity Standard	Typically ≥97% (Titration)

Part 2: Chemical Architecture & Safety Mechanics

The "Ammonium" Advantage: Desensitization

The primary driver for the commercial availability of the ammonium salt (MW 152.15) over the anhydrous free acid (MW 135.12) is safety logistics. Anhydrous HOBt is autocatalytic and shock-sensitive. By neutralizing the acidic N-OH proton with ammonia, the resulting ionic lattice energy stabilizes the molecule, significantly reducing its explosive potential during transport.

Comparative Stoichiometry:

- Anhydrous HOBt: 135.12 g/mol (High Explosive Risk)
- HOBt Monohydrate: ~153.14 g/mol (Standard "Wetted" Reagent, ~12% water)
- HOBt Ammonium Salt: 152.15 g/mol (Stoichiometric Salt, Stable)

Biological Activity (Kinase Inhibition)

© 2026 BenchChem. All rights reserved.

Unlike the hydrate, the ammonium salt is frequently cited in biochemical literature as a selective inhibitor of Protein Kinase C (PKC) isoforms (specifically PKCα and PKCβII).[2] It binds to the ATP-binding site, inhibiting catalytic activity.[1][2] Researchers using this CAS number (63307-62-0) for biological assays must account for the ammonium counterion's influence on buffer pH and ionic strength.

Part 3: Application in Peptide Synthesis[3][4][5][6]

The Nucleophile Risk (Critical Protocol Note)

While HOBt is an additive used to accelerate carbodiimide-mediated coupling, the ammonium salt form introduces ammonia (NH_3) into the reaction mixture.

- The Risk: Ammonia is a nucleophile.[2] In standard coupling reactions (e.g., EDC/DCM), the ammonia released from the salt can compete with the amino component of the peptide, potentially reacting with the activated ester to form a primary amide (termination of the peptide chain).

- The Solution: For critical peptide coupling steps, the ammonium salt should be converted to the free acid in situ or via a pre-wash step, or used in aqueous/biphasic systems where pH control mitigates ammonia nucleophilicity.

Mechanism of Action (Racemization Suppression)

The HOBt moiety (regardless of counterion) functions by intercepting the highly reactive O-acylisourea intermediate formed by carbodiimides (like EDC or DIC). This forms a less reactive, but more selective, "Active Ester" (OBt ester), which prevents the formation of N-acylurea byproducts and suppresses oxazolone-mediated racemization.

© 2026 BenchChem. All rights reserved.

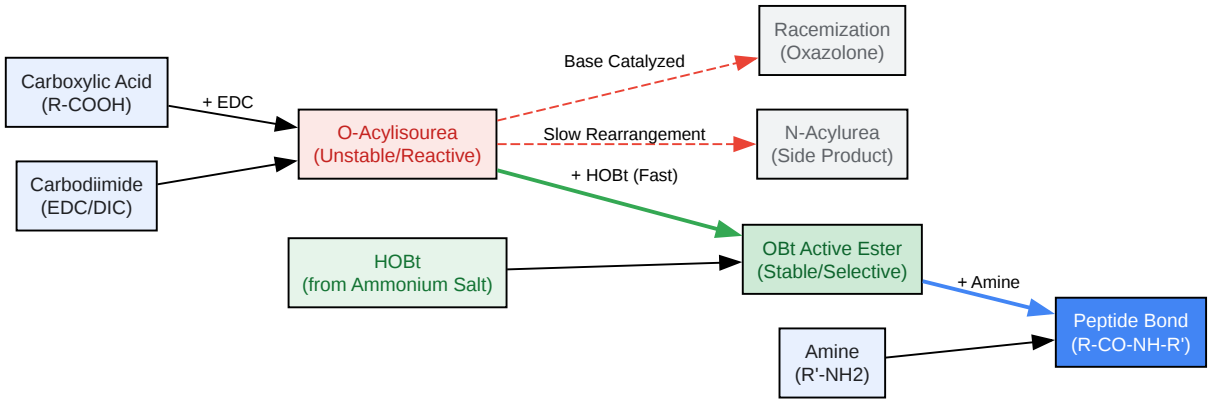

Click to download full resolution via product page

Figure 1: The HOBt activation pathway.[3] HOBt intercepts the unstable O-Acylisourea to form a stable OBt ester, preventing side reactions.

Part 4: Validated Experimental Protocols

Protocol: Conversion of Ammonium Salt to Free Acid (For Peptide Coupling)

Purpose: To utilize HOBt ammonium salt in anhydrous peptide coupling without ammonia interference.

Reagents:

- HOBt Ammonium Salt (MW 152.15)[2][4]
- Ethyl Acetate (EtOAc)
- Hydrochloric Acid (1M HCl)
- Brine (Saturated NaCl)
- Magnesium Sulfate ($MgSO_4$)

© 2026 BenchChem. All rights reserved.

Workflow:

- Dissolution: Dissolve the calculated mass of HOBt Ammonium Salt in a minimal volume of water.
- Acidification: Acidify the solution to pH 2–3 using 1M HCl. This protonates the HOBt anion and converts NH_3 to NH_4Cl (water-soluble).
- Extraction: Extract the aqueous phase 3 times with Ethyl Acetate. The free HOBt (protonated) will migrate to the organic layer.
- Wash: Wash the combined organic layers once with brine to remove residual acid/ammonium salts.
- Drying: Dry the organic layer over anhydrous $MgSO_4$, filter, and concentrate in vacuo (do not heat excessively; keep <40°C).
- Usage: Re-dissolve the resulting solid (Free HOBt) in DMF for immediate use in the coupling reaction.

Calculation for Stoichiometry

When substituting the ammonium salt for the hydrate or anhydrous forms in a protocol, use the following conversion factors to maintain molar equivalence:

Target Moles of HOBt	Required Mass (Anhydrous)	Required Mass (Monohydrate)	Required Mass (Ammonium Salt)
1.0 mmol	135.1 mg	~153.1 mg	152.2 mg
10.0 mmol	1.35 g	~1.53 g	1.52 g

Part 5: References & Authority

The data and protocols presented above are synthesized from standard chemical safety databases and peptide synthesis methodologies.

© 2026 BenchChem. All rights reserved.

- National Institutes of Health (NIH) - PubChem.1H-Benzotriazole, 1-hydroxy-, ammonium salt (1:1). CID 113175. [Link]

Need Custom Synthesis?

BenchChem offers custom synthesis for rare earth carbides and specific isotopiclabeling.

Email: info@benchchem.com or Request Quote Online.

Sources

- 1. CAS 63307-62-0: 1H-Benzotriazole, 1-hydroxy-, ammonium sal… [cymitquimica.com]
- 2. 1H-Benzotriazole, 1-hydroxy-, ammonium salt | 63307-62-0 | Benchchem [benchchem.com]
- 3. The Role of HOBt and HBTU in Peptide Coupling Reactions - Creative Peptides [creative-peptides.com]
- 4. Buy 1H-Benzotriazole, 1-hydroxy-, ammonium salt | 63307-62-0 [smolecule.com]
- To cite this document: BenchChem. [In-Depth Technical Guide: 1-Hydroxybenzotriazole Ammonium Salt]. BenchChem, [2026]. [Online PDF]. Available at: [https://www.benchchem.com/product/b8474530/docs#in-depth-technical-guide-1-hydroxybenzotriazole-ammonium-salt]

Disclaimer & Data Validity:

The information provided in this document is for Research Use Only (RUO) and is strictly not intended for diagnostic or therapeutic procedures. While BenchChem strives to provide accurate protocols, we make no warranties, express or implied, regarding the fitness of this product for every specific experimental setup.

Technical Support: The protocols provided are for reference purposes. Unsure if this reagent suits your experiment?

Need Industrial/Bulk Grade? Request Custom Synthesis Quote

© 2026 BenchChem. All rights reserved.

BenchChem

Our mission is to be the trusted global source of essential and advanced chemicals, empowering scientists and researchers to drive progress in science and industry.

Contact

Address: 3281 E Guasti Rd

Ontario, CA 91761, United States

Phone: (601) 213-4426

Email: info@benchchem.com

Contact our Ph.D. Support Team for a compatibility check

© 2026 BenchChem. All rights reserved.