Technical Support Center: SUN13837 In Vitro Studies

Author: BenchChem Technical Support Team. **Date**: April 2026

Compound of Interest

Compound Name:	*SUN13837*
Cat. No.:	*B8452222*

Get Quote

This technical support center provides troubleshooting guidance and frequently asked questions (FAQs) for researchers utilizing **SUN13837** in in vitro dose-response studies.

Interpreting Dose-Response Curves of SUN13837

SUN13837 is a small molecule modulator of the Fibroblast Growth Factor Receptor (FGFR), exhibiting neuroprotective properties. Accurate interpretation of its dose-response curves is critical for understanding its mechanism of action and potential therapeutic applications.

Data Presentation: In Vitro Efficacy of SUN13837

The following table summarizes representative data from in vitro assays designed to characterize the neuroprotective effects of **SUN13837**. Please note that these are illustrative examples to demonstrate potential trends and experimental outcomes.

© 2026 BenchChem. All rights reserved.

Assay Type	Cell Line/Culture	Endpoint	EC50 / IC50 (nM)	Key Observations
Neuroprotection Assay	Primary Hippocampal Neurons	Neuronal viability (MTT Assay) after glutamate-induced excitotoxicity	~50 - 200	SUN13837 demonstrates a dose-dependent increase in neuronal survival.
FGFR1 Phosphorylation	L6 cells (transfected with human FGFR1)	Phosphorylation of FGFR1 (Tyr653/654)	~100 - 500	SUN13837 induces phosphorylation of the FGFR1 kinase domain, indicating receptor activation.
Downstream Signaling	Primary Cortical Neurons	Phosphorylation of ERK1/2 (p44/42 MAPK)	~200 - 800	Activation of the MAPK pathway is observed following SUN13837 treatment.

Experimental Protocols

Detailed methodologies are crucial for reproducible results. Below are outlines for key experiments.

Neuroprotection Assay Against Glutamate-Induced Excitotoxicity

This assay assesses the ability of **SUN13837** to protect neurons from cell death induced by excessive glutamate exposure.

Materials:

© 2026 BenchChem. All rights reserved.

- Primary hippocampal or cortical neurons
- Neurobasal medium supplemented with B27 and GlutaMAX
- **SUN13837**
- Glutamate
- MTT (3-(4,5-dimethylthiazol-2-yl)-2,5-diphenyltetrazolium bromide) or similar viability reagent
- 96-well plates

Procedure:

- Cell Plating: Plate primary neurons at an appropriate density (e.g., 1 x 10^5 cells/well) in a 96-well plate and culture for 7-10 days to allow for maturation.
- Compound Pre-treatment: Prepare serial dilutions of **SUN13837** in culture medium. Remove the existing medium from the cells and replace it with the medium containing different concentrations of **SUN13837**. Incubate for a predetermined time (e.g., 1-2 hours).
- Glutamate Challenge: Add glutamate to the wells to a final concentration known to induce excitotoxicity (e.g., 25-100 µM). Include a vehicle control group without glutamate and a glutamate-only control group.
- Incubation: Incubate the plate for a period sufficient to induce cell death (e.g., 24 hours).
- Viability Assessment: Measure cell viability using an MTT assay or other suitable methods. The absorbance is read on a plate reader.
- Data Analysis: Calculate the percentage of neuroprotection for each **SUN13837** concentration relative to the glutamate-only control. Plot the results as a dose-response curve to determine the EC50 value.

FGFR1 Phosphorylation Assay

This assay determines if **SUN13837** activates its target receptor, FGFR1.

© 2026 BenchChem. All rights reserved.

Materials:

- L6 cells or another suitable cell line transfected with human FGFR1
- DMEM supplemented with 10% FBS
- **SUN13837**
- Lysis buffer containing phosphatase and protease inhibitors
- Antibodies: Anti-phospho-FGFR1 (Tyr653/654), Anti-total-FGFR1
- Western blot or ELISA reagents

Procedure:

- Cell Culture and Starvation: Culture FGFR1-transfected L6 cells to near confluence. Serum-starve the cells for 4-6 hours to reduce basal receptor phosphorylation.
- Compound Treatment: Treat the cells with various concentrations of **SUN13837** for a short duration (e.g., 15-30 minutes).
- Cell Lysis: Wash the cells with cold PBS and lyse them with lysis buffer.
- Protein Quantification: Determine the protein concentration of each lysate.
- Detection (Western Blot):
  - Separate equal amounts of protein by SDS-PAGE and transfer to a PVDF membrane.
  - Probe the membrane with an anti-phospho-FGFR1 antibody.
  - Strip and re-probe the membrane with an anti-total-FGFR1 antibody for normalization.
- Detection (ELISA): Utilize a sandwich ELISA kit specific for phosphorylated FGFR1.
- Data Analysis: Quantify the band intensity (Western blot) or absorbance (ELISA) and plot the dose-response to determine the EC50 for FGFR1 phosphorylation.

© 2026 BenchChem. All rights reserved.

Mandatory Visualizations

Signaling Pathway of **SUN13837**

© 2026 BenchChem. All rights reserved.

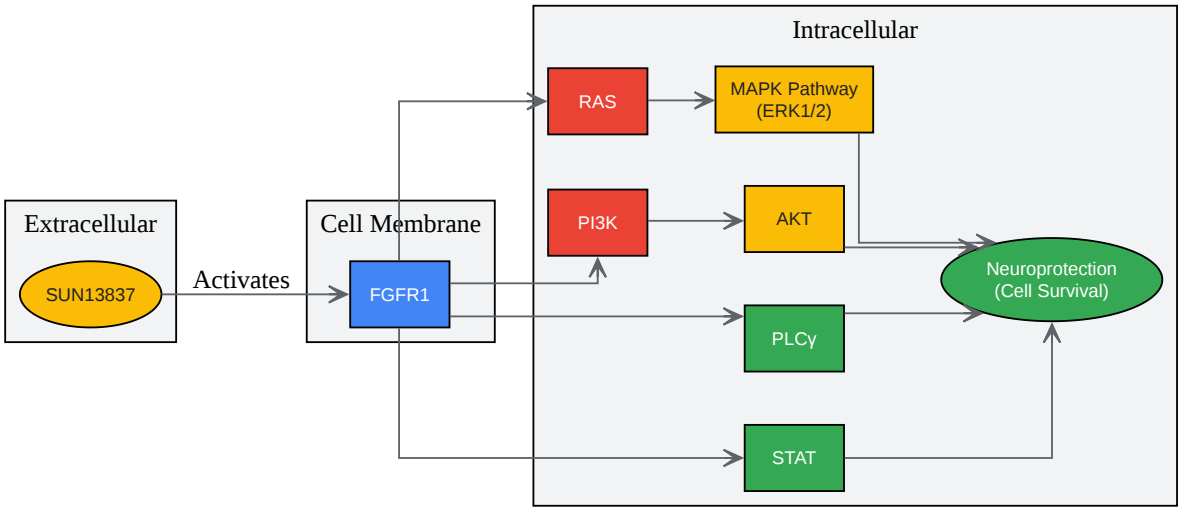

© 2026 BenchChem. All rights reserved.

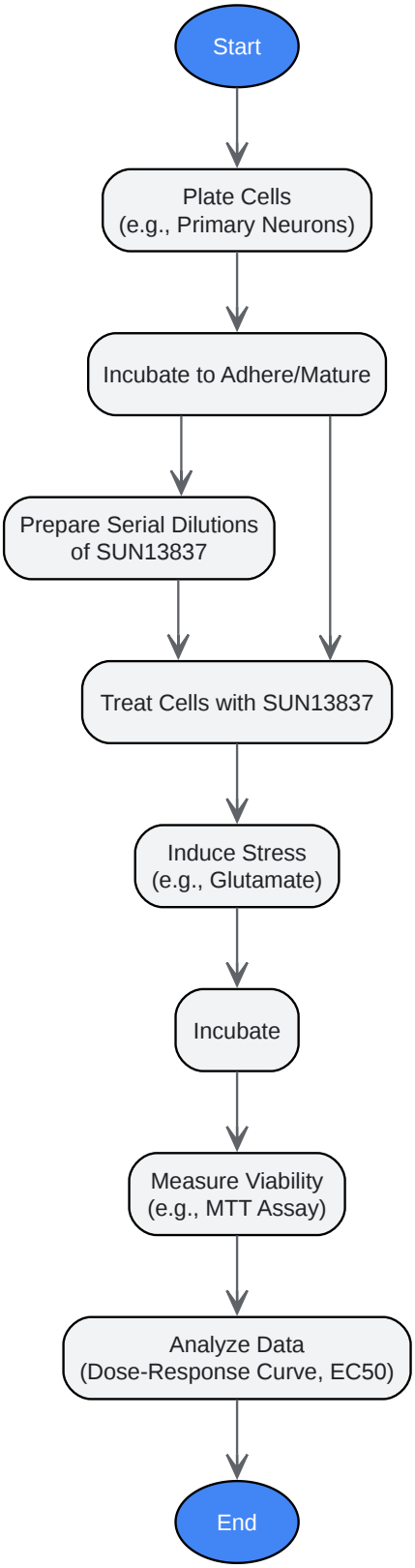

© 2026 BenchChem. All rights reserved.

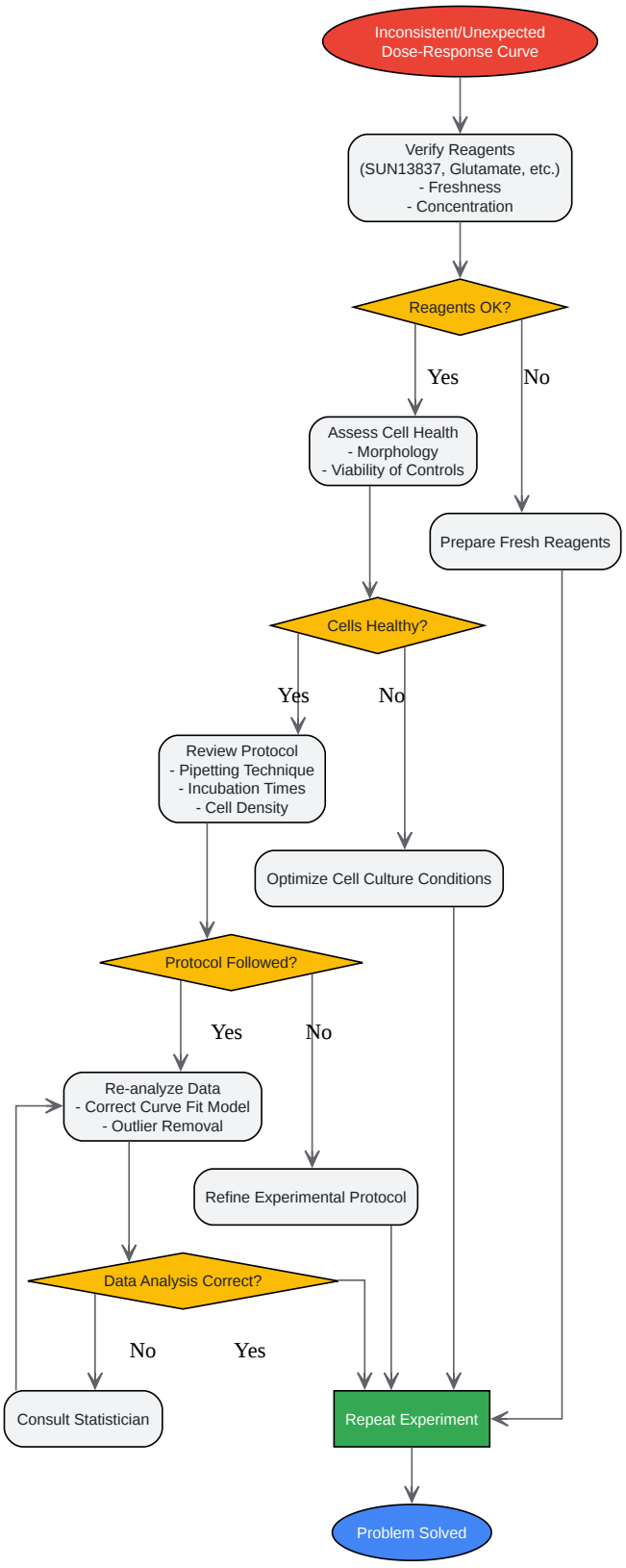

Click to download full resolution via product page

© 2026 BenchChem. All rights reserved.

- To cite this document: BenchChem. [Technical Support Center: SUN13837 In Vitro Studies]. BenchChem, [2026]. [Online PDF]. Available at: [https://www.benchchem.com/product/b8452222/docs#technical-support-center-sun13837-in-vitro-studies]

Disclaimer & Data Validity:

The information provided in this document is for Research Use Only (RUO) and is strictly not intended for diagnostic or therapeutic procedures. While BenchChem strives to provide accurate protocols, we make no warranties, express or implied, regarding the fitness of this product for every specific experimental setup.

Technical Support: The protocols provided are for reference purposes. Unsure if this reagent suits your experiment?

Need Industrial/Bulk Grade? Request Custom Synthesis Quote

BenchChem

Our mission is to be the trusted global source of essential and advanced chemicals, empowering scientists and researchers to drive progress in science and industry.

Contact

Address: 3281 E Guasti Rd

Ontario, CA 91761, United States

Phone: (601) 213-4426

Email: info@benchchem.com

Contact our Ph.D. Support Team for a compatibility check

© 2026 BenchChem. All rights reserved.