Selective oxidation protocols for phenyl aminophenyl sulfides

Author: BenchChem Technical Support Team. **Date**: April 2026

Compound of Interest

Compound Name:	*Phenyl-(2-amino-5-nitrophenyl) sulfoxide*
Cat. No.:	*B8429024*

Get Quote

Application Notes & Protocols

Chemoselective Oxidation of Phenyl Aminophenyl Sulfides: A Guide to Modern Protocols

Introduction: The Chemoselectivity Challenge

The selective oxidation of sulfides to sulfoxides is a cornerstone transformation in organic synthesis, yielding molecules that are pivotal intermediates and final products in pharmaceuticals, agrochemicals, and materials science.[1][2] Phenyl aminophenyl sulfoxides, in particular, are valuable scaffolds in drug development. The synthesis of these compounds presents a classic chemoselectivity challenge: how to oxidize the nucleophilic sulfur atom to a sulfoxide without affecting the often more sensitive and easily oxidized amine functionality present on the same aromatic framework.

Traditional methods often employ harsh oxidants that lead to over-oxidation to the corresponding sulfone or undesired side reactions with the amine group.[1][3] This guide addresses this challenge directly, providing researchers, scientists, and drug development professionals with a detailed overview of modern, selective, and efficient protocols for the

© 2026 BenchChem. All rights reserved.

oxidation of phenyl aminophenyl sulfides. We will move beyond simple step-by-step instructions to explain the causality behind experimental choices, ensuring each protocol is presented as a self-validating system grounded in mechanistic understanding.

The Mechanistic Dichotomy: Sulfide vs. Amine Oxidation

The success of any selective oxidation protocol hinges on exploiting the subtle differences in the reactivity of the sulfur and nitrogen atoms. Both are nucleophiles, yet their oxidation pathways and susceptibility to different oxidizing systems can be finely controlled.

- Sulfide Oxidation: This typically proceeds via a nucleophilic attack of the electron-rich sulfur atom on an electrophilic oxygen donor (e.g., a metal-peroxo species or hydrogen peroxide). The desired product is the sulfoxide, but over-oxidation can yield the sulfone.
- Amine Oxidation: Aromatic amines can be oxidized through several pathways, including single-electron transfer (SET) or nucleophilic attack, leading to a complex mixture of products such as nitroso, nitro, or polymeric species.

The goal is to employ a catalytic system that significantly lowers the activation energy for sulfide oxidation while leaving the pathway for amine oxidation energetically unfavorable.

© 2026 BenchChem. All rights reserved.

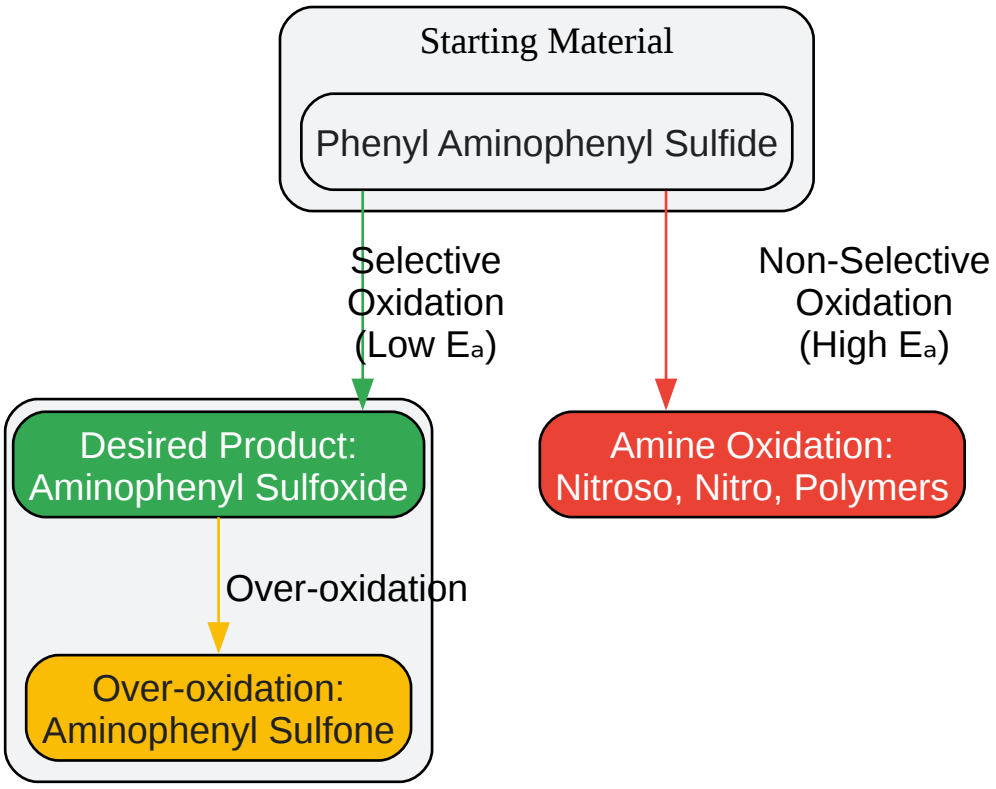

Click to download full resolution via product page

Figure 1: Competing oxidation pathways for phenyl aminophenyl sulfide. The key to success is favoring the green pathway while inhibiting the red and yellow pathways.

Protocols for Selective Sulfoxidation

Herein, we detail four distinct and robust protocols that leverage different modern chemical technologies to achieve high selectivity.

Protocol 1: Heterogeneous Catalysis with Hydrogen Peroxide

Principle: This approach utilizes a solid-supported catalyst with an environmentally benign oxidant, hydrogen peroxide (H_2O_2). The catalyst, often a metal complex immobilized on a support like silica, activates H_2O_2 to form a selective oxygen-transfer agent. The heterogeneous nature of the catalyst simplifies product purification and allows for catalyst recycling, aligning with green chemistry principles.[4][5] A silica-based tungstate catalyst has proven highly effective and reusable for this transformation.[5]

© 2026 BenchChem. All rights reserved.

Experimental Protocol: Silica-Tungstate Catalyzed Oxidation

- Catalyst Preparation: The recyclable silica-based tungstate interphase catalyst can be prepared by functionalizing mesoporous silica with an aminopropyl group, followed by acidification and ion exchange with tungstate, as described by Karimi et al.[5]
- Reaction Setup: To a 25 mL round-bottom flask, add the phenyl aminophenyl sulfide (1.0 mmol), the silica-based tungstate catalyst (e.g., 2 mol% tungsten), and a solvent mixture of CH_2Cl_2/MeOH (10 mL).
- Oxidant Addition: Stir the mixture at room temperature. Slowly add 30% aqueous hydrogen peroxide (1.1 mmol, 1.1 equivalents) dropwise over 10 minutes.
- Reaction Monitoring: Monitor the reaction progress by Thin Layer Chromatography (TLC) or High-Performance Liquid Chromatography (HPLC). The reaction is typically complete within 1-3 hours.
- Workup and Isolation: Upon completion, filter the reaction mixture to recover the catalyst. The catalyst can be washed with the solvent, dried, and reused for subsequent runs.[5]
- Wash the filtrate with a saturated aqueous solution of $Na_2S_2O_3$ to quench any remaining peroxide, followed by a brine wash.
- Dry the organic layer over anhydrous Na_2SO_4, filter, and concentrate under reduced pressure to yield the crude aminophenyl sulfoxide.
- Purify the product by column chromatography on silica gel if necessary.

Data Summary: Metal-Catalyzed Selective Sulfoxidation with H_2O_2

© 2026 BenchChem. All rights reserved.

Catalyst System	Oxidant	Key Advantages	Selectivity (Sulfoxide)	Reference
Silica-Tungstate	30% H_2O_2	Recyclable, mild conditions, high yields	Good to Excellent	[5]
Iron(III) Bis(phenol) Amine on Graphene Oxide	30% H_2O_2	Green (water solvent), room temp, recyclable	High	[4]
Mn_2ZnO_4 Spinel Nanoparticles	30% H_2O_2	Heterogeneous, high chemoselectivity, mild	High	[6]
Dendritic Phosphomolybdate	30% H_2O_2	Reusable, applicable to drug synthesis	High (can be tuned to sulfone)	[7]

Protocol 2: Electrochemical Flow Oxidation

Principle: Electrochemical oxidation offers a reagent-free method for selective oxidation. By precisely controlling the applied anode potential, one can tune the oxidizing power of the system to be just sufficient to oxidize the sulfide without affecting the amine. This method avoids traditional chemical oxidants, using traceless electrons as the "reagent".[8] Continuous-flow microreactors provide excellent control over reaction parameters and enhance safety and scalability.[9]

Experimental Protocol: Continuous-Flow Electro-oxidation

- System Setup: Utilize a commercially available electrochemical flow reactor (e.g., an Asia Flux module) equipped with graphite or diamond electrodes.
- Reagent Preparation: Prepare a stock solution of the phenyl aminophenyl sulfide (e.g., 0.1 M) in a suitable solvent system like acetonitrile containing a supporting electrolyte (e.g., 0.1 M $LiClO_4$) and a small amount of water, which acts as the oxygen source.[9]

© 2026 BenchChem. All rights reserved.

- Potential Screening: Perform a preliminary cyclic voltammetry or a series of small-scale experiments at varying potentials (e.g., 1.5 V to 2.5 V) to identify the optimal potential that maximizes sulfoxide formation while minimizing amine degradation or sulfone formation.[9]
- Continuous Synthesis: Set the potentiostat to the optimized voltage. Pump the substrate solution through the electrochemical flow cell at a defined flow rate to control the residence time.
- Collection and Analysis: Collect the solution exiting the reactor. The product can be isolated by removing the solvent and electrolyte. Analyze the conversion and selectivity using HPLC or GC-MS.

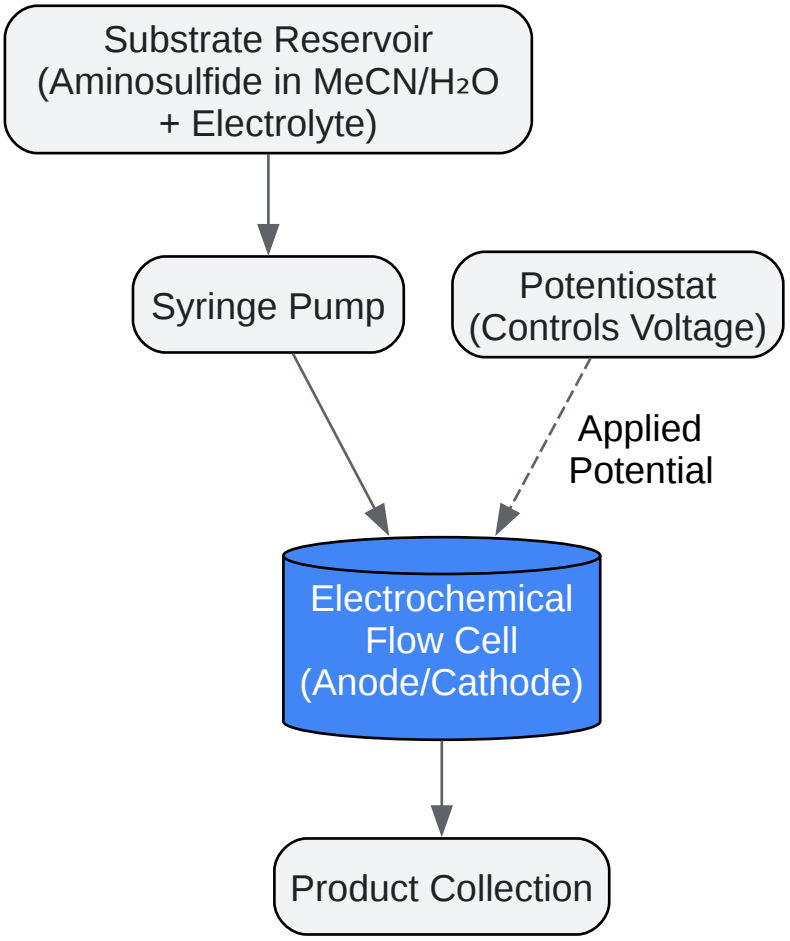

Click to download full resolution via product page

Figure 2: Workflow for a continuous-flow electrochemical oxidation system. Selectivity is controlled by the potentiostat.

© 2026 BenchChem. All rights reserved.

Protocol 3: Visible-Light Photoredox Catalysis

Principle: This green chemistry approach uses visible light as the energy source to drive the oxidation, with molecular oxygen (from air) as the terminal oxidant. A semiconductor photocatalyst, such as titanium dioxide (TiO_2), can be synergistically activated by a tertiary amine co-catalyst. The interaction forms a visible-light harvesting surface complex, which mediates the selective transfer of electrons from the sulfide to oxygen.[10]

Experimental Protocol: TiO_2-Mediated Aerobic Photo-oxidation

- Reaction Setup: In a photoreactor tube, suspend TiO_2 (e.g., Degussa P25) in methanol. Add the phenyl aminophenyl sulfide (1.0 mmol) and a catalytic amount of a tertiary amine like triethylamine (TEA, e.g., 10 mol%).[10]
- Atmosphere: Seal the tube but ensure an aerobic atmosphere (or bubble air/O_2 through the solution for a set time).
- Irradiation: Place the tube in a photoreactor equipped with visible-light LEDs (e.g., blue LEDs) and stir vigorously to keep the TiO_2 suspended. Maintain a constant temperature (e.g., 25 °C) using a cooling fan.
- Reaction Monitoring: Monitor the reaction by taking aliquots at regular intervals and analyzing by TLC or HPLC.
- Workup and Isolation: Once the starting material is consumed, centrifuge the mixture to pellet the TiO_2 catalyst.
- Decant the supernatant and concentrate under reduced pressure. The residue can be purified by column chromatography to isolate the pure sulfoxide.

© 2026 BenchChem. All rights reserved.

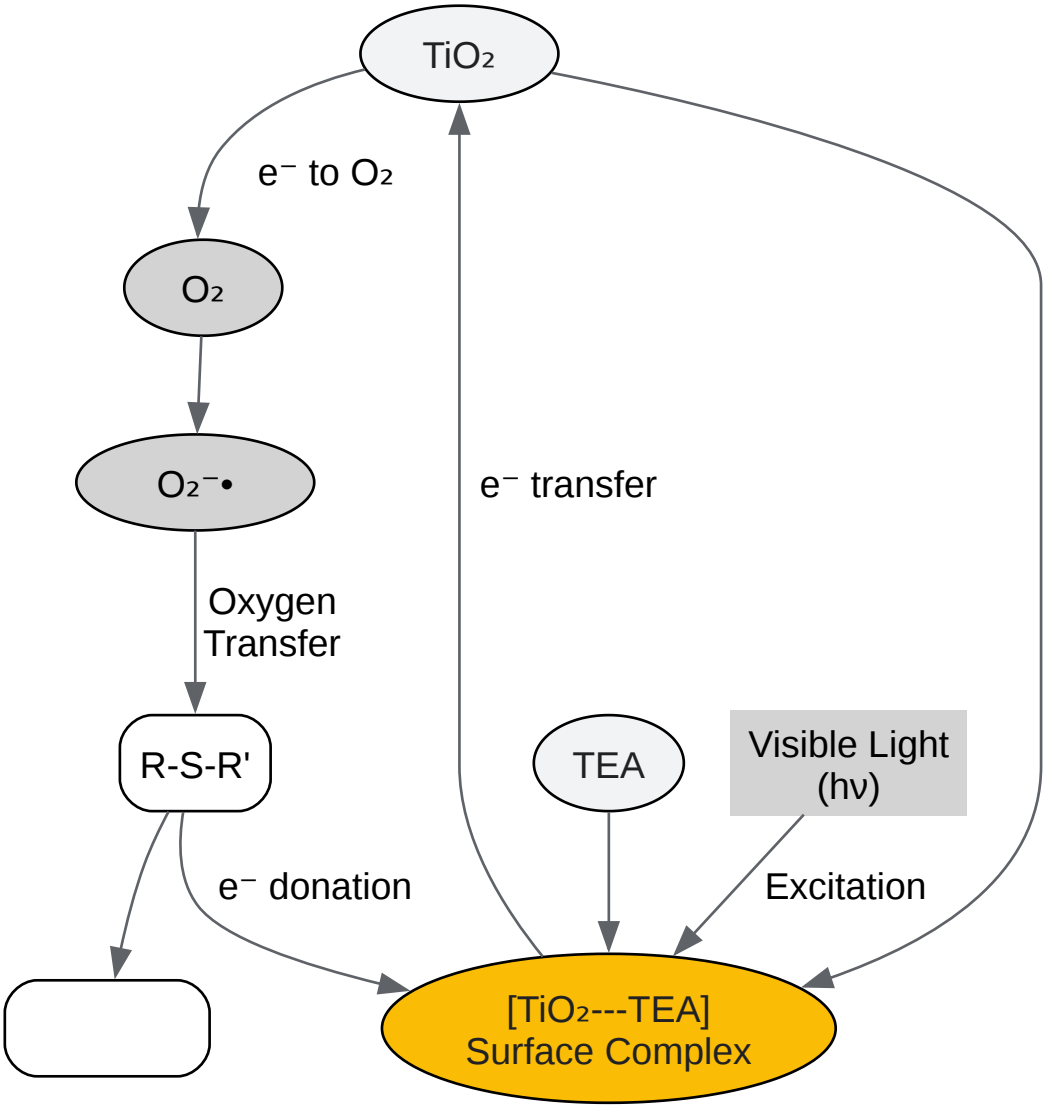

Click to download full resolution via product page

Figure 3: Simplified mechanism for TiO_2/TEA synergistic photoredox catalysis for selective sulfide oxidation.

Protocol 4: Metal-Free Organocatalytic Oxidation

Principle: To avoid the cost and potential toxicity of metal catalysts, organocatalytic systems have been developed. 2,2,2-Trifluoroacetophenone, for example, can catalyze the selective oxidation of sulfides to sulfoxides using H_2O_2. The electron-withdrawing trifluoromethyl group activates the ketone carbonyl for nucleophilic attack by H_2O_2, forming a highly reactive peroxyhemiacetal intermediate that acts as the selective oxygen transfer agent.[2]

© 2026 BenchChem. All rights reserved.

Experimental Protocol: Trifluoroacetophenone-Catalyzed Oxidation

- Reaction Setup: In a vial, dissolve the phenyl aminophenyl sulfide (1.0 mmol) and 2,2,2-trifluoroacetophenone (0.1 mmol, 10 mol%) in a suitable solvent (e.g., an aqueous buffer or a biphasic system).[2]
- Oxidant Addition: Add 30% aqueous hydrogen peroxide (1.1 mmol, 1.1 equivalents) to the stirred solution at room temperature.
- Reaction Monitoring: Monitor the reaction progress by TLC. The reactions are often complete in a short time.
- Workup and Isolation: Upon completion, dilute the reaction with water and extract with an organic solvent (e.g., ethyl acetate).
- Wash the combined organic layers with aqueous $Na_2S_2O_3$ and brine.
- Dry the organic layer over anhydrous Na_2SO_4, filter, and concentrate under reduced pressure.
- Purify the resulting sulfoxide by column chromatography.

Conclusion

The selective oxidation of phenyl aminophenyl sulfides is a solvable challenge with the application of modern synthetic methodologies. The choice of protocol depends on the specific substrate, available equipment, and desired scale. Electrochemical and photoredox methods offer elegant, green alternatives to traditional reagent-based oxidations, providing high levels of control and selectivity. Heterogeneous and organocatalytic systems offer advantages in terms of cost, safety, and ease of product purification. By understanding the underlying principles of each method, researchers can confidently select and optimize a protocol to successfully synthesize valuable aminophenyl sulfoxide building blocks for their research and development endeavors.

References

- Tertiary amine mediated aerobic oxidation of sulfides into sulfoxides by visible-light photoredox catalysis on TiO2 - PMC. (Source: vertexaisearch.cloud.google.com) 10

© 2026 BenchChem. All rights reserved.

- Oxidation of Amines and Sulfides with Hydrogen Peroxide and Alkyl Hydrogen Peroxide. The Nature of the Oxygen-Transfer Step - Schlegel Group. (Source: vertexaisearch.cloud.google.com) 11
- Chemoselective Oxidation of Sulfides by Simple Metal-salen Catalyst. (Source: vertexaisearch.cloud.google.com) 12
- An environmentally benign and selective electrochemical oxidation of sulfides and thiols in a continuous-flow microreactor - Pure. (Source: vertexaisearch.cloud.google.com) 9
- stereoselective oxidation of sulfides to sulfoxides by n-chloramines - Middle East Technical University. (Source: vertexaisearch.cloud.google.com) 13
- Selective and green oxidation of sulfides in water using a new iron(III) bis(phenol) amine complex supported on functionalized graphene oxide | Request PDF - ResearchGate. (Source: vertexaisearch.cloud.google.com) 4
- Selective oxidation of organic sulfides to sulfoxides using sugar derived cis-dioxo molybdenum(VI) complexes - SciSpace. (Source: vertexaisearch.cloud.google.com) 1
- Thiols and Sulfides - Chemistry LibreTexts. (Source: vertexaisearch.cloud.google.com) 14
- A facile and selective oxidation of sulfides to sulfones - R Discovery. (Source: vertexaisearch.cloud.google.com) 15
- Green Organocatalytic Oxidation of Sulfides to Sulfoxides and Sulfones. (Source: vertexaisearch.cloud.google.com) 2
- Oxidation of copper sulfides in aqueous ammonia - Murdoch Research Portal. (Source: vertexaisearch.cloud.google.com) 16
- Sulfoxide synthesis by oxidation - Organic Chemistry Portal. (Source: vertexaisearch.cloud.google.com) 17
- Oxidation of Amines and Sulfides with Hydrogen Peroxide and Alkyl Hydrogen Peroxide. The Nature of the Oxygen-Transfer Step | Journal of the American Chemical Society - ACS Publications. (Source: vertexaisearch.cloud.google.com) 18

© 2026 BenchChem. All rights reserved.

- Towards an efficient selective oxidation of sulfides to sulfones by NiWO 4 and α-Ag 2 WO 4 - CDMF. (Source: vertexaisearch.cloud.google.com) 19
- A Highly Efficient, Green, Rapid, and Chemoselective Oxidation of Sulfides Using Hydrogen Peroxide and Boric Acid as the Catalyst under Solvent-Free Conditions. (2010) | Amin Rostami - SciSpace. (Source: vertexaisearch.cloud.google.com) 20
- Selective oxidation of hydrogen sulfide to ammonium thiosulfate and sulfur over vanadium-bismuth oxide catalysts | Scilit. (Source: vertexaisearch.cloud.google.com) 21
- Mild, Selective, and Efficient Oxidation of Sulfides to Sulfoxides Catalyzed by Mn(III)-Salen Complexes | Request PDF - ResearchGate. (Source: vertexaisearch.cloud.google.com) 22
- Recent Advances in Catalytic Oxidation of Organic Sulfides: Applications of Metal–Ionic Liquid Catalytic Systems - PMC. (Source: vertexaisearch.cloud.google.com) 23
- Rapid, economical and green solid oxidation of sulfides to sulfoxides and their antimicrobial evaluation- part 1 - Der Pharma Chemica. (Source: vertexaisearch.cloud.google.com) 3
- Highly Selective and Green Oxidation of Sulfides with Urea Hydrogen Peroxide in the Presence of Mn(III) Porphyrin Supported onto Carbon Nanotubes | Request PDF - ResearchGate. (Source: vertexaisearch.cloud.google.com) 24
- Visible-light photocatalytic selective oxidation of amine and sulfide with CsPbBr3 as photocatalyst - New Journal of Chemistry (RSC Publishing). (Source: vertexaisearch.cloud.google.com) 25
- Scalable selective electrochemical oxidation of sulfides to sulfoxides - RSC Publishing. (Source: vertexaisearch.cloud.google.com) 8
- Selective Oxidation of Sulfides to Sulfoxides Using 30% Hydrogen Peroxide Catalyzed with a Recoverable Silica-Based Tungstate Interphase Catalyst - Organic Chemistry Portal. (Source: vertexaisearch.cloud.google.com) 5
- Selective Oxidation of Sulfides to Sulfoxides by Hydrogen Peroxide in the Presence of Mn2ZnO4 Spinel Nanoparticle Catalyst - Journal of Synthetic Chemistry. (Source: vertexaisearch.cloud.google.com) 6

© 2026 BenchChem. All rights reserved.

- Efficient oxidation of sulfides to sulfoxides catalyzed by heterogeneous Zr-containing polyoxometalate grafted on graphene oxide - PMC. (Source: vertexaisearch.cloud.google.com) 26
- The Selective Oxidation of Sulfides to Sulfoxides or Sulfones with Hydrogen Peroxide Catalyzed by a Dendritic Phosphomolybdate Hybrid - MDPI. (Source: mdpi.com) Link

Need Custom Synthesis?

BenchChem offers custom synthesis for rare earth carbides and specific isotopiclabeling.

Email: info@benchchem.com or Request Quote Online.

Sources

- 1. scispace.com [scispace.com]
- 2. Green Organocatalytic Oxidation of Sulfides to Sulfoxides and Sulfones [organic-chemistry.org]
- 3. derpharmachemica.com [derpharmachemica.com]
- 4. researchgate.net [researchgate.net]
- 5. organic-chemistry.org [organic-chemistry.org]
- 6. jsynthchem.com [jsynthchem.com]
- 7. mdpi.com [mdpi.com]
- 8. Scalable selective electrochemical oxidation of sulfides to sulfoxides - Green Chemistry (RSC Publishing) [pubs.rsc.org]
- 9. pure.tue.nl [pure.tue.nl]
- 10. Tertiary amine mediated aerobic oxidation of sulfides into sulfoxides by visible-light photoredox catalysis on TiO2 - PMC [pmc.ncbi.nlm.nih.gov]
- 11. schlegelgroup.wayne.edu [schlegelgroup.wayne.edu]
- 12. shokubai.org [shokubai.org]
- 13. etd.lib.metu.edu.tr [etd.lib.metu.edu.tr]
- 14. chem.libretexts.org [chem.libretexts.org]
- 15. discovery.researcher.life [discovery.researcher.life]

- 16. Research Portal [researchportal.murdoch.edu.au]
- 17. Sulfoxide synthesis by oxidation [organic-chemistry.org]
- 18. pubs.acs.org [pubs.acs.org]
- 19. cdmf.org.br [cdmf.org.br]
- 20. scispace.com [scispace.com]
- 21. vertexaisearch.cloud.google.com [vertexaisearch.cloud.google.com]
- 22. researchgate.net [researchgate.net]
- 23. Recent Advances in Catalytic Oxidation of Organic Sulfides: Applications of Metal–Ionic Liquid Catalytic Systems - PMC [pmc.ncbi.nlm.nih.gov]
- 24. researchgate.net [researchgate.net]
- 25. Visible-light photocatalytic selective oxidation of amine and sulfide with CsPbBr3 as photocatalyst - New Journal of Chemistry (RSC Publishing) [pubs.rsc.org]
- 26. Efficient oxidation of sulfides to sulfoxides catalyzed by heterogeneous Zr-containing polyoxometalate grafted on graphene oxide - PMC [pmc.ncbi.nlm.nih.gov]

- To cite this document: BenchChem. [Selective oxidation protocols for phenyl aminophenyl sulfides]. BenchChem, [2026]. [Online PDF]. Available at: [https://www.benchchem.com/product/b8429024/docs#selective-oxidation-protocols-for-phenyl-aminophenyl-sulfides]

Disclaimer & Data Validity:

The information provided in this document is for Research Use Only (RUO) and is strictly not intended for diagnostic or therapeutic procedures. While BenchChem strives to provide accurate protocols, we make no warranties, express or implied, regarding the fitness of this product for every specific experimental setup.

Technical Support: The protocols provided are for reference purposes. Unsure if this reagent suits your experiment?

Need Industrial/Bulk Grade? Request Custom Synthesis Quote

BenchChem

Our mission is to be the trusted global source of essential and advanced chemicals, empowering scientists and researchers to drive progress in science and industry.

Contact

Address: 3281 E Guasti Rd

Ontario, CA 91761, United States

Phone: (601) 213-4426

Email: info@benchchem.com

Contact our Ph.D. Support Team for a compatibility check

© 2026 BenchChem. All rights reserved.