Application Notes & Protocols: Advanced Synthetic Methodologies in Pharmaceutical and Agrochemical Development

Author: BenchChem Technical Support Team. **Date**: May 2026

Compound of Interest

Compound Name:	*3,4-Dimethylcyclopent-2-enone*
CAS No.:	*30434-64-1*
Cat. No.:	*B1580612*

Get Quote

Abstract

The synthesis of biologically active molecules is the cornerstone of both the pharmaceutical and agrochemical industries. While the ultimate applications differ—one targeting human health and the other crop protection—the underlying challenge is the same: to construct complex molecular architectures efficiently, selectively, and sustainably. This guide provides researchers, scientists, and drug development professionals with an in-depth analysis of convergent, high-impact synthetic technologies that are revolutionizing molecule construction in both sectors. We move beyond simple procedural lists to explain the causality behind experimental choices, offering field-proven insights into the application of Flow Chemistry, Biocatalysis, Photoredox Catalysis, and C-H Functionalization. Detailed protocols for cornerstone reactions, such as Suzuki-Miyaura cross-coupling and pyrazole synthesis, are provided as practical, self-validating templates for laboratory application.

© 2026 BenchChem. All rights reserved.

Introduction: The Convergent Evolution of Chemical Synthesis

Historically, pharmaceutical and agrochemical synthesis pipelines evolved in parallel, each with distinct priorities. Pharmaceutical development has been driven by the need for complex, stereochemically dense scaffolds with meticulously tuned ADMET (Absorption, Distribution, Metabolism, Excretion, Toxicology) properties.[1] In contrast, the agrochemical sector has prioritized cost of goods, large-scale production, environmental degradability, and a favorable toxicology profile for non-target organisms.

However, the modern synthetic landscape is characterized by convergence. Economic and environmental pressures are compelling the pharmaceutical industry to adopt greener, more efficient manufacturing processes, while the increasing structural complexity of new herbicides and fungicides demands the adoption of sophisticated synthetic methods previously confined to medicinal chemistry.[2][3] This guide explores four enabling technologies at the heart of this convergence, which empower chemists to build better molecules faster, safer, and more sustainably.

High-Impact Convergent Technologies

Modern synthetic challenges demand tools that offer precision, efficiency, and novel reactivity. The following platform technologies have demonstrated transformative potential across both pharmaceutical and agrochemical R&D.

Flow Chemistry: From Process Intensification to Enhanced Safety

Flow chemistry, where reactions are conducted in continuously flowing streams within a network of tubes or channels, represents a paradigm shift from traditional batch processing.[4][5] The primary driver for its adoption is the exceptional control it offers over reaction parameters. The high surface-area-to-volume ratio in flow reactors enables near-instantaneous heat transfer, allowing for the safe execution of highly exothermic reactions or the use of highly reactive intermediates that would be hazardous at batch scale.[5][6] This precise control over temperature, pressure, and residence time leads to higher reproducibility, improved yields, and cleaner product profiles.[7][8]

© 2026 BenchChem. All rights reserved.

In pharmaceutical manufacturing, flow chemistry is instrumental in scaling up the production of Active Pharmaceutical Ingredients (APIs), reducing development times, and enabling multi-step syntheses without the need for isolating intermediates.[5][9] For agrochemicals, this technology facilitates the large-scale, cost-effective production of key active ingredients while minimizing waste and improving process safety.[4]

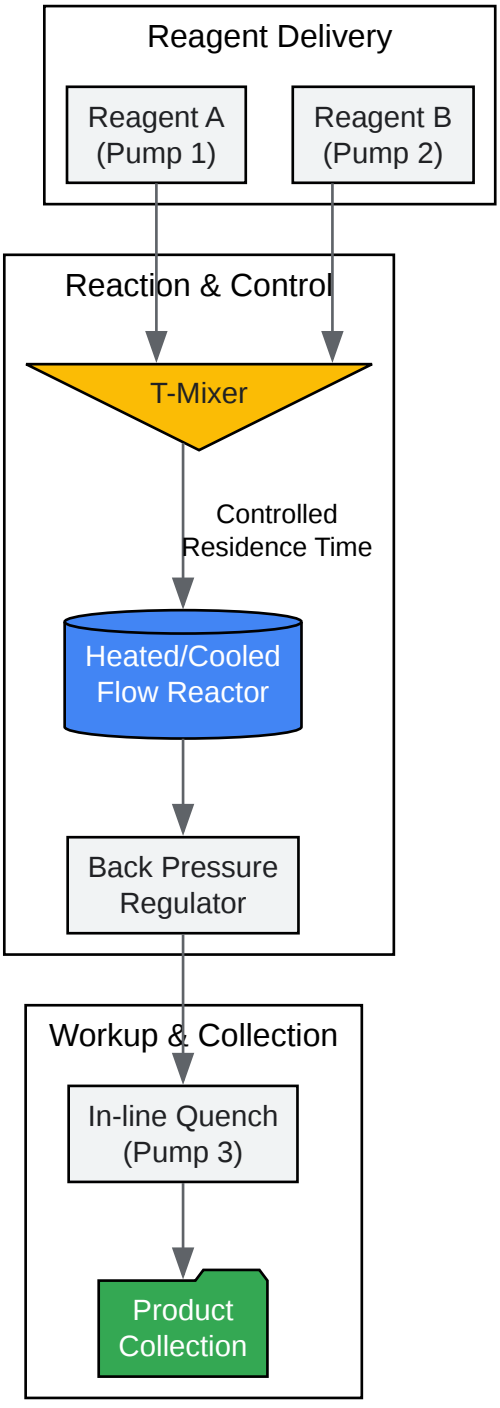

© 2026 BenchChem. All rights reserved.

Click to download full resolution via product page

Caption: Generic Experimental Workflow for Continuous Flow Synthesis.

Biocatalysis: Harnessing Nature's Selectivity

Biocatalysis leverages enzymes—nature's catalysts—to perform chemical transformations with unparalleled chemo-, regio-, and stereoselectivity.[10] This is particularly crucial for producing enantiomerically pure compounds, as the biological activity of pharmaceuticals and agrochemicals often resides in a single enantiomer.[2][11] The use of enzymes, either as isolated preparations or within whole-cell systems, allows for reactions to occur under mild, aqueous conditions, aligning perfectly with green chemistry principles by reducing reliance on heavy metals and harsh organic solvents.[3][10][12]

Hydrolases, reductases, transaminases, and oxidases are routinely employed in the industrial synthesis of chiral building blocks for both drugs and crop protection agents.[13] For example, lipase-catalyzed kinetic resolutions are used to produce chiral amines for agrochemicals, while ketoreductases are vital for setting key stereocenters in blockbuster drugs like atorvastatin.[10][14]

Photoredox Catalysis: Activating Molecules with Light

Photoredox catalysis uses visible light to initiate single-electron transfer (SET) processes, generating highly reactive radical intermediates from stable precursors under exceptionally mild conditions.[15][16] This strategy unlocks novel bond-forming pathways that are often inaccessible through traditional thermal methods.[17][18] By converting light energy into chemical energy, photoredox catalysts can drive a vast array of transformations, including cross-couplings, C-H functionalizations, and trifluoromethylations.[15]

The ability to generate radicals under gentle conditions makes this technique ideal for the late-stage functionalization of complex, sensitive molecules in drug discovery.[19] In agrochemical research, photoredox catalysis provides new avenues for constructing novel toxophores and improving the sustainability of synthetic routes.[17] The integration of photoredox with other catalytic modes, such as transition metal or organocatalysis, continues to expand the synthetic toolkit.[17]

© 2026 BenchChem. All rights reserved.

C-H Functionalization: The Logic of Molecular Editing

C-H functionalization is a transformative strategy that allows for the direct conversion of ubiquitous carbon-hydrogen bonds into new carbon-carbon or carbon-heteroatom bonds, often bypassing the need for pre-functionalized starting materials.[1][20] This "molecular editing" approach streamlines synthetic routes, reduces step counts, and minimizes waste. The ability to perform these modifications late in a synthetic sequence—termed Late-Stage Functionalization (LSF)—is a powerful tool for rapidly generating analogues of a lead compound to optimize its biological properties.[21][22]

Palladium-catalyzed C-H activation has been widely used to modify drug molecules and their derivatives with high regioselectivity.[21] This strategy enables medicinal chemists to fine-tune pharmacological profiles by introducing groups that can alter polarity, lipophilicity, and metabolic stability.[1] Similarly, in agrochemical discovery, C-H functionalization accelerates the exploration of structure-activity relationships (SAR) to identify more potent and selective agents.

Application Focus: Pharmaceutical Synthesis

The synthesis of APIs is often a multi-step endeavor where the construction of biaryl and heteroaryl scaffolds is a recurring theme. The Suzuki-Miyaura cross-coupling reaction is a preeminent tool for this purpose, valued for its reliability and broad functional group tolerance.[23][24]

© 2026 BenchChem. All rights reserved.

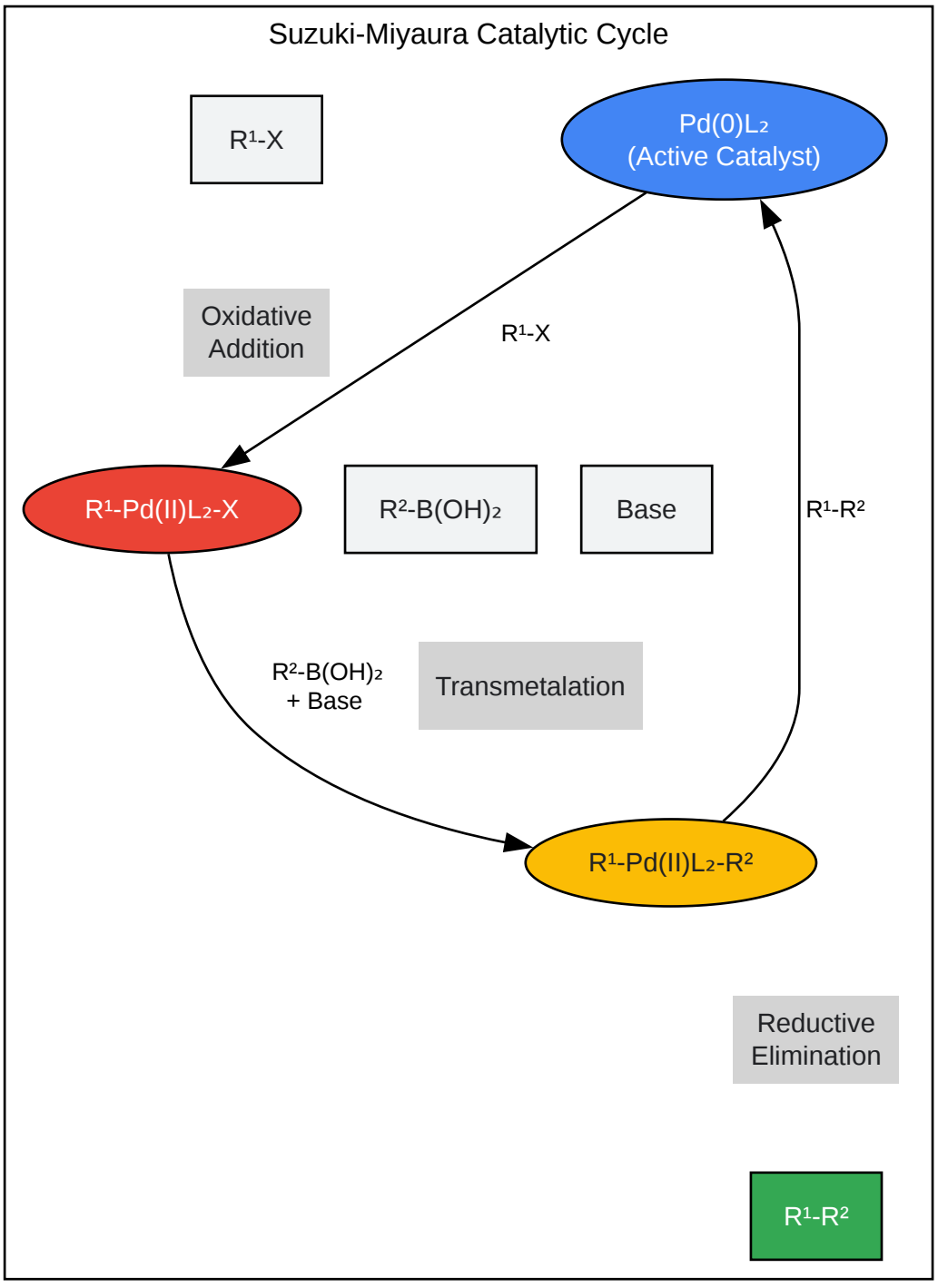

Click to download full resolution via product page

Caption: The Catalytic Cycle of the Suzuki-Miyaura Cross-Coupling.

© 2026 BenchChem. All rights reserved.

Protocol: Synthesis of 2-Arylpyridines via Suzuki Cross-Coupling

The 2-arylpyridine motif is a common scaffold in biologically active molecules.[25] This protocol details a general method for its synthesis.

Objective: To synthesize a 2-arylpyridine by coupling a 2-halopyridine with an arylboronic acid.

Materials:

- 2-Bromopyridine (Electrophile)
- Phenylboronic acid (Nucleophile)
- Palladium(II) acetate ($Pd(OAc)_2$, Catalyst Precursor)
- Triphenylphosphine (PPh_3, Ligand)
- Potassium carbonate (K_2CO_3, Base)
- 1,4-Dioxane (Solvent)
- Water

Procedure:

- Setup: To a flame-dried 25 mL round-bottom flask equipped with a magnetic stir bar and reflux condenser, add 2-bromopyridine (1.0 mmol, 1.0 eq.), phenylboronic acid (1.2 mmol, 1.2 eq.), and potassium carbonate (2.0 mmol, 2.0 eq.).
- Catalyst Addition: In a separate vial, pre-mix palladium(II) acetate (0.02 mmol, 2 mol%) and triphenylphosphine (0.08 mmol, 8 mol%). Add this catalyst/ligand mixture to the reaction flask.
- Solvent Addition: Evacuate and backfill the flask with an inert atmosphere (Nitrogen or Argon) three times. Add 1,4-dioxane (5 mL) and water (1 mL) via syringe.

© 2026 BenchChem. All rights reserved.

- Reaction: Heat the reaction mixture to 90 °C with vigorous stirring. Monitor the reaction progress by Thin Layer Chromatography (TLC) or Liquid Chromatography-Mass Spectrometry (LC-MS). The reaction is typically complete within 4-12 hours.
- Workup: After cooling to room temperature, dilute the mixture with ethyl acetate (20 mL) and water (10 mL). Separate the organic layer, and extract the aqueous layer with ethyl acetate (2 x 10 mL).
- Purification: Combine the organic layers, wash with brine, dry over anhydrous sodium sulfate (Na_2SO_4), filter, and concentrate under reduced pressure. Purify the crude product by column chromatography on silica gel (eluting with a hexane/ethyl acetate gradient) to yield the pure 2-phenylpyridine.

Data Summary:

© 2026 BenchChem. All rights reserved.

Parameter	Condition	Rationale
Catalyst	$Pd(OAc)_2$ / $Pd_2(dba)_3$	Common, reliable palladium sources that are reduced in situ to the active Pd(0) species.[23][26]
Ligand	Phosphine-based (e.g., PPh_3)	Stabilizes the Pd catalyst, facilitates oxidative addition and reductive elimination steps.[23]
Base	K_2CO_3, Cs_2CO_3, K_3PO_4	Activates the boronic acid for transmetalation and neutralizes the acid generated.[23]
Solvent	Dioxane/H_2O, Toluene, DMF	Aprotic polar solvents are typically used; a small amount of water can accelerate the reaction.[23]
Temperature	80-110 °C	Provides thermal energy to overcome activation barriers for all steps in the catalytic cycle.

Application Focus: Agrochemical Synthesis

In agrochemical synthesis, the goal is often the robust, large-scale production of heterocyclic compounds that form the core of many modern fungicides and herbicides. Pyrazole carboxamides, for example, are a blockbuster class of fungicides that act by inhibiting the succinate dehydrogenase (SDHI) enzyme.[27]

© 2026 BenchChem. All rights reserved.

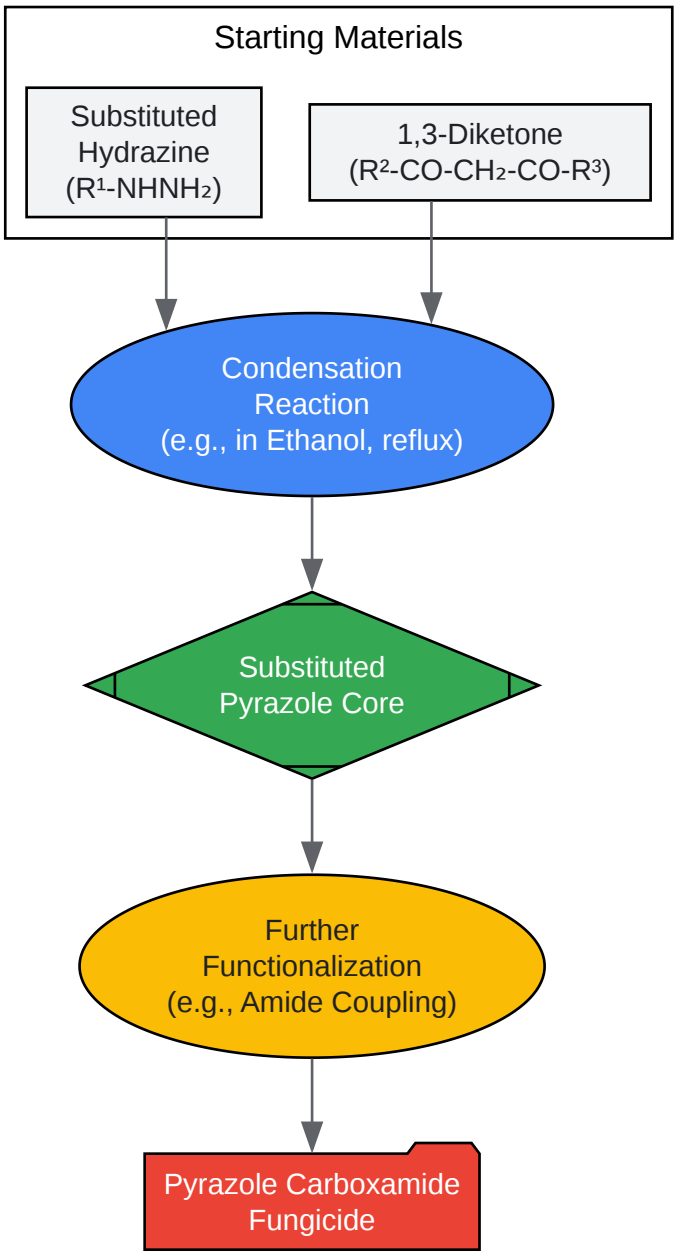

Click to download full resolution via product page

Need Custom Synthesis?

BenchChem offers custom synthesis for rare earth carbides and specific isotopiclabeling.

Email: info@benchchem.com or Request Quote Online.

Sources

© 2026 BenchChem. All rights reserved.

- 1. The emergence of the C–H functionalization strategy in medicinal chemistry and drug discovery - Chemical Communications (RSC Publishing) [pubs.rsc.org]
- 2. pubs.acs.org [pubs.acs.org]
- 3. jmpcr.samipubco.com [jmpcr.samipubco.com]
- 4. syrris.com [syrris.com]
- 5. mdpi.com [mdpi.com]
- 6. asynt.com [asynt.com]
- 7. BJOC - The synthesis of active pharmaceutical ingredients (APIs) using continuous flow chemistry [beilstein-journals.org]
- 8. scllifesciences.com [scllifesciences.com]
- 9. researchgate.net [researchgate.net]
- 10. Biocatalysis explained: from pharmaceutical to bulk chemical production - Reaction Chemistry & Engineering (RSC Publishing) DOI:10.1039/C9RE00301K [pubs.rsc.org]
- 11. Developments in the Catalytic Asymmetric Synthesis of Agrochemicals and Their Synthetic Importance. | Semantic Scholar [semanticscholar.org]
- 12. publications.anveshanaindia.com [publications.anveshanaindia.com]
- 13. zhaogroup.chbe.illinois.edu [zhaogroup.chbe.illinois.edu]
- 14. mdpi.com [mdpi.com]
- 15. Dawn of photoredox catalysis - PMC [pmc.ncbi.nlm.nih.gov]
- 16. researchgate.net [researchgate.net]
- 17. sigmaaldrich.com [sigmaaldrich.com]
- 18. pubs.acs.org [pubs.acs.org]
- 19. ijpsjournal.com [ijpsjournal.com]
- 20. Late-stage C–H functionalization offers new opportunities in drug discovery [ouci.dntb.gov.ua]
- 21. Late-Stage C-H Activation of Drug (Derivative) Molecules with Pd(II) Catalysis - PubMed [pubmed.ncbi.nlm.nih.gov]
- 22. researchgate.net [researchgate.net]
- 23. Yoneda Labs [yonedalabs.com]
- 24. Suzuki–Miyaura cross coupling reaction: recent advancements in catalysis and organic synthesis - Catalysis Science & Technology (RSC Publishing) [pubs.rsc.org]

© 2026 BenchChem. All rights reserved.

- 25. benchchem.com [benchchem.com]
- 26. mdpi.com [mdpi.com]
- 27. mdpi.com [mdpi.com]
- To cite this document: BenchChem. [Application Notes & Protocols: Advanced Synthetic Methodologies in Pharmaceutical and Agrochemical Development]. BenchChem, [2026]. [Online PDF]. Available at: [https://www.benchchem.com/product/b1580612/docs#application-notes-protocols-advanced-synthetic-methodologies-in-pharmaceutical-and-agrochemical-development]

Disclaimer & Data Validity:

The information provided in this document is for Research Use Only (RUO) and is strictly not intended for diagnostic or therapeutic procedures. While BenchChem strives to provide accurate protocols, we make no warranties, express or implied, regarding the fitness of this product for every specific experimental setup.

Technical Support: The protocols provided are for reference purposes. Unsure if this reagent suits your experiment?

Need Industrial/Bulk Grade? Request Custom Synthesis Quote

BenchChem

Our mission is to be the trusted global source of essential and advanced chemicals, empowering scientists and researchers to drive progress in science and industry.

Contact

Address: 3281 E Guasti Rd

Ontario, CA 91761, United States

Phone: (601) 213-4426

Email: info@benchchem.com

Contact our Ph.D. Support Team for a compatibility check

© 2026 BenchChem. All rights reserved.

© 2026 BenchChem. All rights reserved.