Technical Support Center: Optimizing 2-(2-Chloroethyl)pyrimidine Functionalization

Author: BenchChem Technical Support Team. **Date**: February 2026

Compound of Interest		
Compound Name:	*2-(2-Chloroethyl)pyrimidine*	
Cat. No.:	*B8345844*	*Get Quote*

Topic: Preventing Elimination Side Reactions in **2-(2-Chloroethyl)pyrimidine** Ticket ID: CHEM-SUP-8821 Support Level: Tier 3 (Senior Application Scientist) Status: Open

The Core Challenge: The "Vinyl Trap"

Welcome to the technical support center. If you are working with **2-(2-chloroethyl)pyrimidine** (Compound 1), you are likely encountering a persistent impurity: 2-vinylpyrimidine (Compound 3).

This is not a random side reaction; it is a predictable consequence of the molecule's electronic structure. The pyrimidine ring is strongly electron-withdrawing (π-deficient). This acidity activates the methylene protons at the

-position relative to the ring (the

-position relative to the chlorine).

When you introduce a base to facilitate nucleophilic attack, you risk deprotonating this position, triggering an E2 elimination instead of the desired Sn2 substitution.

Mechanistic Bifurcation

The following diagram illustrates the competing pathways. Your goal is to force the reaction down the green path (Sn2) and block the red path (E2).

© 2026 BenchChem. All rights reserved.

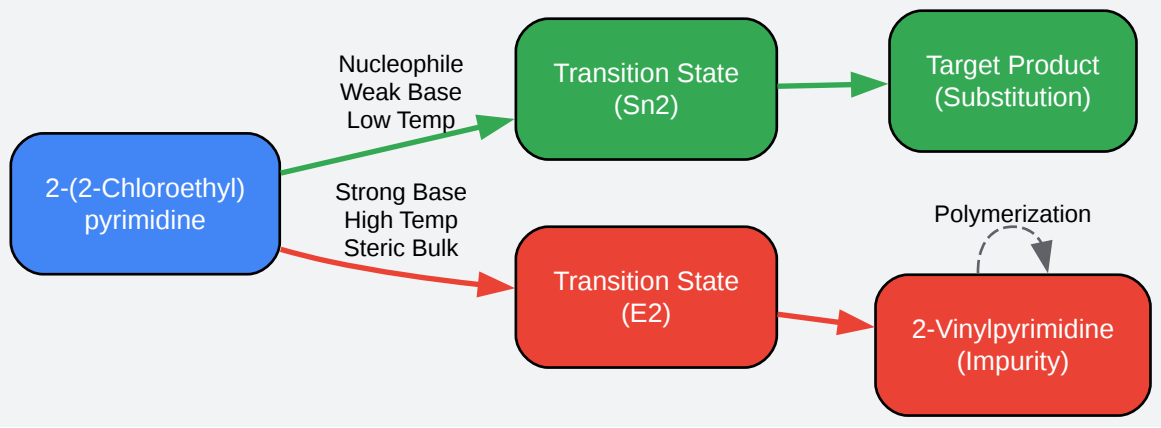

Click to download full resolution via product page

Figure 1: Mechanistic bifurcation between desired substitution (Sn2) and unwanted elimination (E2).

Diagnostic Center: Troubleshooting Your Reaction

Use this matrix to diagnose your specific issue based on TLC or LC-MS data.

© 2026 BenchChem. All rights reserved.

Symptom	Probable Cause	Technical Explanation	Corrective Action
New spot with higher Rf (non-polar)	E2 Elimination	You generated 2-vinylpyrimidine. The base was too strong ( ) or the temperature was too high.	Switch to a carbonate base ( ). Lower reaction temperature to <40°C.
Starting material remains unreacted	Nucleophile Stalled	The chloride is a mediocre leaving group, and the nucleophile is too weak or solvated.	Finkelstein Modification: Add 0.1–1.0 eq of Potassium Iodide (KI) to generate the more reactive iodide in situ.
Complex mixture / Streaking on TLC	Polymerization	The vinyl impurity formed and subsequently polymerized or acted as a Michael acceptor for your nucleophile.	Abort & Restart. Once vinylation occurs, purification is difficult. Restart with optimized conditions (see Section 4).
Precipitate forms immediately	Salt Formation	If using amines, the product HCl salt is precipitating, potentially stalling the reaction if no base is present.	Ensure adequate solvent volume (DMF/MeCN) and use an inorganic base scavenger ( ).

The Reaction Environment: Base & Solvent Selection[1]

The choice of base is the single most critical factor. You must select a base strong enough to neutralize the HCl byproduct but too weak to deprotonate the

© 2026 BenchChem. All rights reserved.

-methylene (approximate

26-28).

Base Selection Matrix

Base Class	Examples	Risk Level	Recommendation
Strong/Bulky	-BuOK, NaH, DBU	CRITICAL	NEVER USE. These guarantee E2 elimination due to high basicity and steric bulk.
Hydroxides/Alkoxides	NaOH, KOH, NaOMe	HIGH	AVOID. Strong basicity promotes elimination; OH/OR can also act as competing nucleophiles.
Tertiary Amines	TEA, DIPEA	MODERATE	USE WITH CAUTION. Can be used at 0°C, but heating often triggers elimination.
Inorganic Carbonates	, ,	LOW	PREFERRED. Poor solubility in organics limits the "effective" basicity, favoring Sn2.

Solvent Selection

- Recommended:Acetonitrile (MeCN) or DMF. These polar aprotic solvents enhance the nucleophilicity of your attacking species without solvating it too strongly (unlike protic solvents).
- Avoid: Ethanol/Methanol (promotes solvolysis/elimination at high temps).

The "Golden Standard" Protocol

© 2026 BenchChem. All rights reserved.

This protocol is designed to maximize yield while suppressing the elimination pathway. It utilizes the Finkelstein Catalyst effect and Heterogeneous Base buffering.

Scenario: Reacting **2-(2-chloroethyl)pyrimidine** with a secondary amine (e.g., morpholine, piperidine).

Reagents

- Substrate: **2-(2-Chloroethyl)pyrimidine** (1.0 eq)
- Nucleophile: Amine (1.1 – 1.2 eq)
- Base: Powdered anhydrous

  (2.0 eq)
- Catalyst: Potassium Iodide (KI) (0.1 eq)
- Solvent: Anhydrous Acetonitrile (MeCN) [0.2 M concentration]

Step-by-Step Procedure

- Preparation: Dry the

  in an oven (120°C) prior to use to remove trace water.
- Solvation: In a round-bottom flask, dissolve the amine and KI in anhydrous MeCN.
- Base Addition: Add the powdered

  . The mixture will be a suspension.
- Cooling: Cool the suspension to 0°C using an ice bath. Crucial Step: Lowering kinetic energy suppresses the higher-activation-energy E2 pathway.
- Addition: Add **2-(2-chloroethyl)pyrimidine** dropwise (dissolved in minimal MeCN if solid).
- Reaction:
  - Stir at 0°C for 1 hour.

© 2026 BenchChem. All rights reserved.

- Allow to warm to Room Temperature (20-25°C).
- Monitor: Check TLC after 4 hours. If starting material persists, heat gently to 40°C. Do not reflux.

- Workup: Filter off the solid salts (

  ,

). Concentrate the filtrate. Partition between EtOAc and Water.

Optimization Logic Flowchart

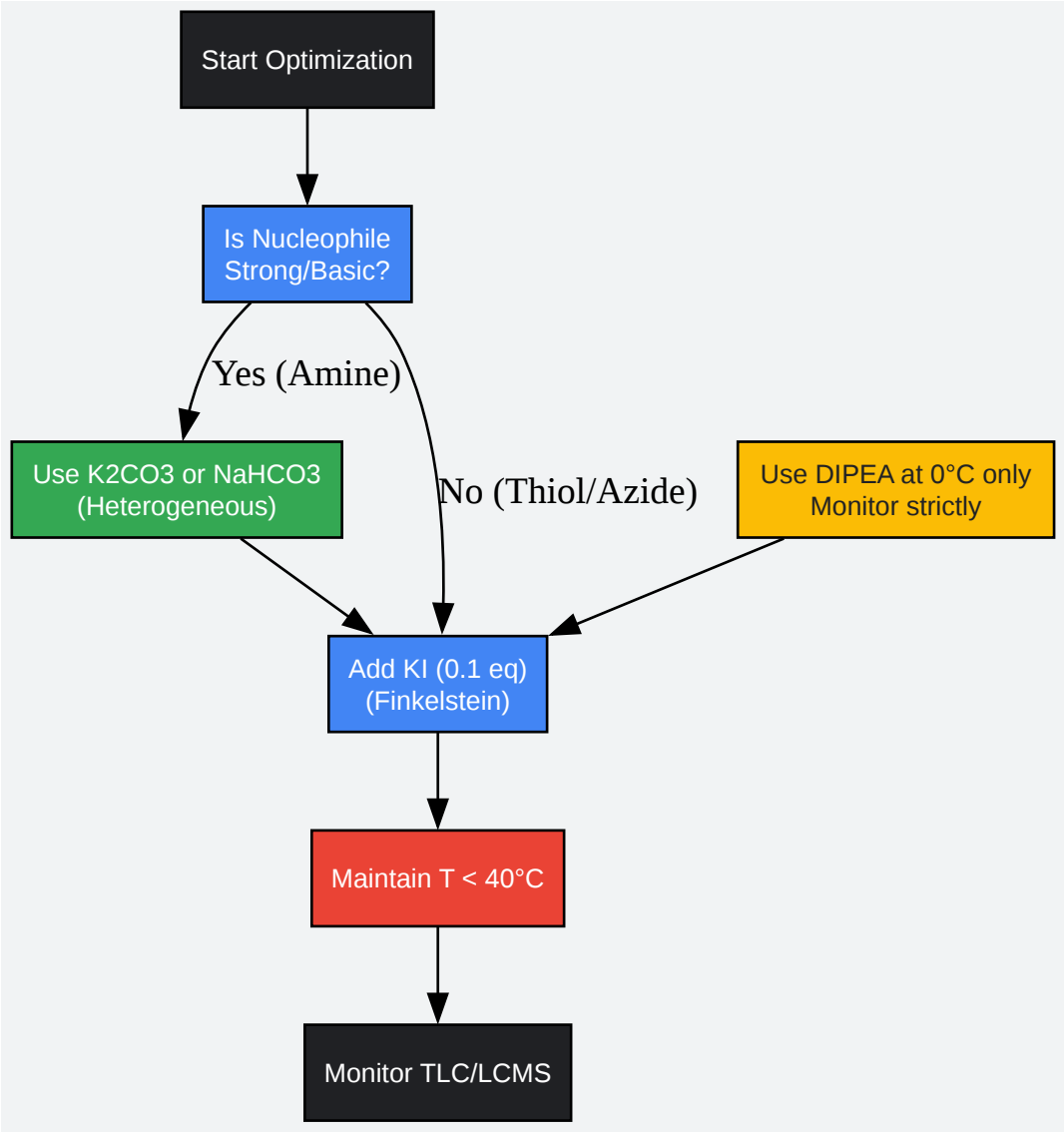

Click to download full resolution via product page

© 2026 BenchChem. All rights reserved.

Figure 2: Decision logic for selecting reaction conditions.

Frequently Asked Questions (FAQ)

Q: Can I use NaOH to speed up the reaction? A: No. Hydroxide is a strong base and a nucleophile. It will cause rapid elimination to 2-vinylpyrimidine or hydrolysis to the alcohol. Stick to carbonate bases.

Q: I see the vinyl impurity forming even with K_2CO_3. What now? A: Use Cesium Carbonate (

). The "Cesium Effect" often improves solubility and nucleophilicity due to the large cation radius, allowing the reaction to proceed at lower temperatures where elimination is kinetically disfavored.

Q: Can I purify the product if it contains 10% vinyl impurity? A: It is difficult. The vinyl compound is often an oil with similar solubility. However, the vinyl group is a Michael acceptor. You can try adding a "scavenger" nucleophile (like a polymer-supported thiol) that selectively reacts with the vinyl impurity, changing its polarity drastically, then filtering it out.

Q: Why does my starting material turn black upon storage? A: **2-(2-chloroethyl)pyrimidine** is unstable as a free base. It can undergo intermolecular self-alkylation (quaternization). Store it as the HCl salt at -20°C. Liberate the free base only immediately before use.

References

- Mechanism of E2 Elimination: Clayden, J., Greeves, N., & Warren, S. (2012). Organic Chemistry (2nd ed.). Oxford University Press.
- Pyrimidine Acidity & Reactivity: Joule, J. A., & Mills, K. (2010). Heterocyclic Chemistry (5th ed.). Wiley. (Section: Pyrimidines - Alkyl derivatives).[1][2]
- Finkelstein Reaction Applications: Smith, M. B., & March, J. (2007). March's Advanced Organic Chemistry: Reactions, Mechanisms, and Structure (6th ed.). Wiley-Interscience.
- Synthesis of Pyrimidine Derivatives: Brown, D. J. (1994). The Pyrimidines. Wiley-Interscience. (Detailed review of halo-alkyl pyrimidine reactivity).
- pKa Data for Heterocycles: Williams, R. (2022). pKa Data Compiled. Organic Chemistry Data. Link (Demonstrating the electron-withdrawing effect of nitrogen heterocycles on alkyl side chains).

© 2026 BenchChem. All rights reserved.

Need Custom Synthesis?

BenchChem offers custom synthesis for rare earth carbides and specific isotopiclabeling.

Email: info@benchchem.com or Request Quote Online.

Sources

- 1. Kilo-scale synthesis process for 2'-O-(2-methoxyethyl)-pyrimidine derivatives - PubMed [pubmed.ncbi.nlm.nih.gov]
- 2. Pyrimidine synthesis [organic-chemistry.org]
- To cite this document: BenchChem. [Technical Support Center: Optimizing 2-(2-Chloroethyl)pyrimidine Functionalization]. BenchChem, [2026]. [Online PDF]. Available at: [https://www.benchchem.com/product/b8345844#preventing-elimination-side-reactions-in-2-2-chloroethyl-pyrimidine]

Disclaimer & Data Validity:

The information provided in this document is for Research Use Only (RUO) and is strictly not intended for diagnostic or therapeutic procedures. While BenchChem strives to provide accurate protocols, we make no warranties, express or implied, regarding the fitness of this product for every specific experimental setup.

Technical Support: The protocols provided are for reference purposes. Unsure if this reagent suits your experiment? [Contact our Ph.D. Support Team for a compatibility check]

Need Industrial/Bulk Grade? Request Custom Synthesis Quote

BenchChem

Our mission is to be the trusted global source of essential and advanced chemicals, empowering scientists and researchers to drive progress in science and industry.

Contact

Address: 3281 E Guasti Rd

Ontario, CA 91761, United States

Phone: (601) 213-4426

Email: info@benchchem.com

© 2026 BenchChem. All rights reserved.

© 2026 BenchChem. All rights reserved.