A Researcher's Guide to Verifying Carbon Nanotube Functionalization with Raman Spectroscopy

Author: BenchChem Technical Support Team. **Date**: May 2026

Compound of Interest

Compound Name:	*N-(Prop-2-yn-1-yl)-4-(pyren-1-yl)butanamide*
Cat. No.:	*B8244295*

Get Quote

For researchers, scientists, and drug development professionals, the precise functionalization of carbon nanotubes (CNTs) is a critical step in harnessing their remarkable properties for advanced applications. Whether for targeted drug delivery, bio-sensing, or advanced materials, ensuring that functional molecules are correctly attached to the CNT surface is paramount. Raman spectroscopy has emerged as a powerful, non-destructive technique for this purpose. This guide provides an in-depth comparison of how Raman spectroscopy can be used to verify both covalent and non-covalent functionalization of CNTs, supported by experimental data and detailed protocols.

The "Why" Behind Functionalization and the Role of Raman Spectroscopy

Pristine carbon nanotubes are inherently inert and insoluble in many common solvents, which limits their practical application. Functionalization, the process of attaching molecules or functional groups to the surface of CNTs, overcomes these limitations, enhancing their solubility, biocompatibility, and enabling further chemical modifications.[1]

© 2026 BenchChem. All rights reserved.

There are two primary methods of functionalization:

- Covalent Functionalization: This involves the formation of a chemical bond between the functional group and the carbon atoms of the CNT. This process intentionally introduces defects in the sp^2 hybridized carbon lattice of the nanotube.[2]

- Non-covalent Functionalization: This method relies on weaker intermolecular forces, such as van der Waals forces or π-π stacking, to adsorb molecules onto the CNT surface. This approach aims to preserve the intrinsic electronic and structural properties of the nanotubes.[3]

Raman spectroscopy is exceptionally sensitive to the vibrational modes of the carbon lattice in CNTs. By analyzing the changes in the Raman spectrum before and after functionalization, we can gain detailed insights into the nature and extent of the modification.[4]

Deconstructing the Raman Spectrum of Carbon Nanotubes

The Raman spectrum of CNTs is characterized by several key features, each providing unique information about the nanotube's structure and integrity.

- D-band (Disorder-induced band): Located around 1350 cm^{-1}, the D-band is associated with defects and disruptions in the sp^2 carbon lattice.[5][6] Its intensity is a direct indicator of the level of disorder in the CNT structure.

- G-band (Graphitic band): Found near 1582 cm^{-1}, the G-band arises from the in-plane vibrations of the sp^2 hybridized carbon atoms that form the nanotube walls.[5][7] This band is a hallmark of the graphitic nature of CNTs.

- 2D-band (or G'-band): Appearing around 2700 cm^{-1}, the 2D-band is an overtone of the D-band and is sensitive to the electronic band structure of the CNTs.[8]

The intensity ratio of the D-band to the G-band, denoted as I(D)/I(G), is a crucial metric for quantifying the degree of defects or functionalization.[5][9]

© 2026 BenchChem. All rights reserved.

Covalent vs. Non-Covalent Functionalization: A Raman Perspective

The way in which functionalization alters the Raman spectrum provides a clear distinction between covalent and non-covalent attachment.

Covalent Functionalization: A Signature of Induced Disorder

Covalent functionalization inherently disrupts the sp^2 lattice of the CNTs by introducing sp^3 hybridized carbon atoms at the site of bond formation. This disruption leads to several distinct changes in the Raman spectrum:

- Significant Increase in the D-band Intensity: The creation of covalent bonds acts as a defect, leading to a pronounced increase in the intensity of the D-band.[9]
- Increased I(D)/I(G) Ratio: Consequently, the I(D)/I(G) ratio increases significantly, providing a quantitative measure of the degree of functionalization.[2][9]
- G-band Broadening and Shift: The G-band may broaden and shift to a higher wavenumber (a "blue shift") due to the strain induced by the attached functional groups.[7]

Non-Covalent Functionalization: Preserving the Nanotube's Integrity

In contrast, non-covalent functionalization aims to preserve the pristine structure of the CNTs. The changes in the Raman spectrum are therefore more subtle:

- Minimal Change in the D-band Intensity: Since no covalent bonds are formed and the sp^2 lattice remains largely intact, the D-band intensity shows little to no increase.[3]
- Stable I(D)/I(G) Ratio: The I(D)/I(G) ratio remains close to that of the pristine CNTs, indicating the absence of significant defect introduction.
- Subtle G-band Shifts: Minor shifts in the G-band may be observed due to the interaction between the adsorbed molecules and the CNT surface, but these are typically much smaller

© 2026 BenchChem. All rights reserved.

than those seen with covalent functionalization.[10]

Quantitative Comparison of Raman Signatures

The following table summarizes the expected changes in key Raman parameters for both covalent and non-covalent functionalization, based on experimental observations.

© 2026 BenchChem. All rights reserved.

Raman Parameter	Pristine CNTs	Covalently Functionalized CNTs	Non-Covalently Functionalized CNTs	Causality
I(D)/I(G) Ratio	Low (e.g., < 0.5)	High (e.g., > 1.0) [9]	Remains Low (e.g., < 0.6)	Covalent bonding creates sp^3 defects, increasing the D-band intensity. Non-covalent interactions do not create such defects.
G-band Position	~1582 cm^{-1}	Blue-shifted (up to 10-20 cm^{-1})[7]	Minor shift (< 5 cm^{-1})[10]	Covalent bonds induce strain on the CNT lattice. Weaker non-covalent interactions cause minimal strain.
G-band FWHM	Narrow	Broader[7]	Remains Narrow	The introduction of defects and functional groups leads to a wider range of vibrational environments.
2D-band Shape	Sharp and symmetric	Broader and less defined	Largely unchanged	Covalent functionalization disrupts the electronic band structure, affecting the two-phonon

© 2026 BenchChem. All rights reserved.

scattering process of the 2D-band.

Experimental Workflow for Verifying CNT Functionalization

This section provides a detailed, step-by-step methodology for acquiring and analyzing Raman spectra of CNT samples.

© 2026 BenchChem. All rights reserved.

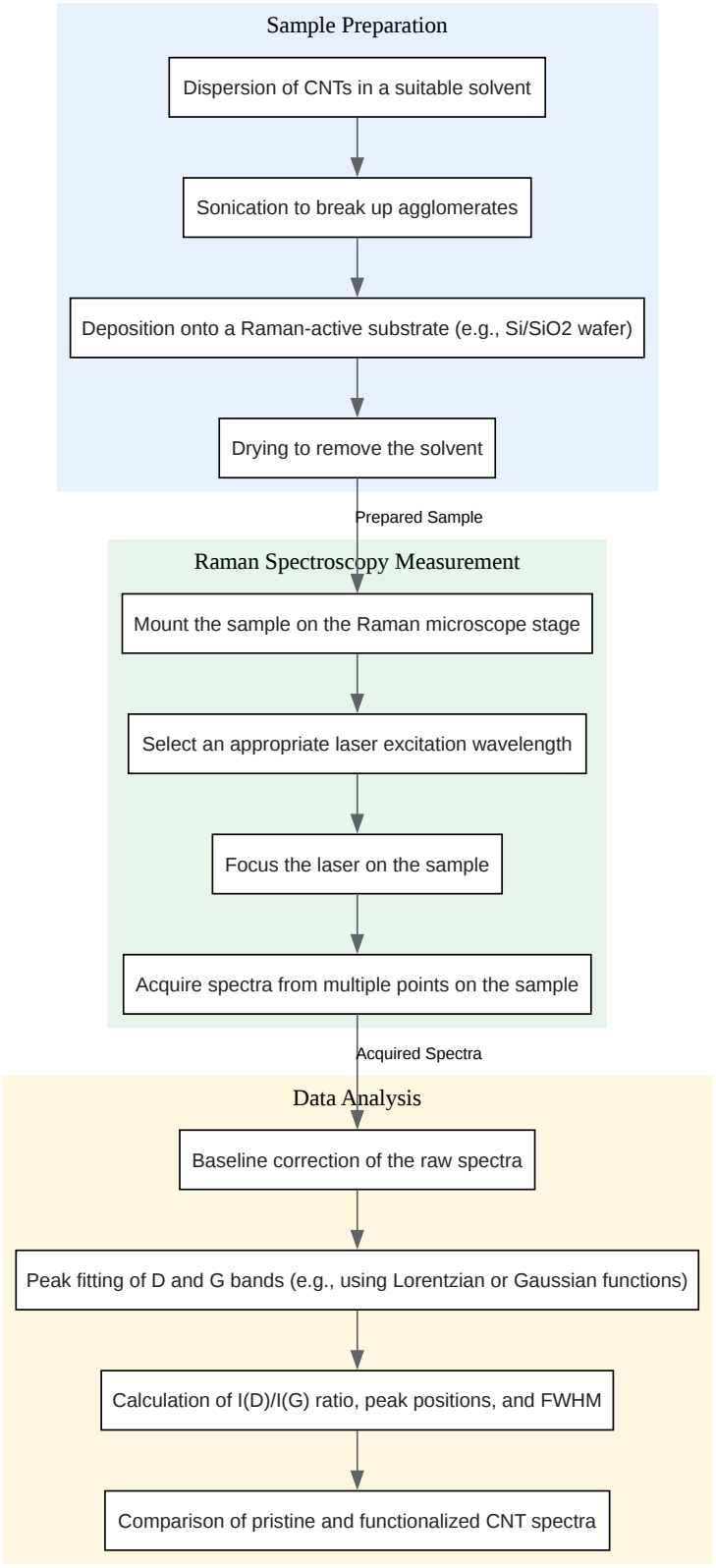

Click to download full resolution via product page

Caption: Experimental workflow for verifying CNT functionalization using Raman spectroscopy.

© 2026 BenchChem. All rights reserved.

Detailed Experimental Protocol

1. Sample Preparation:

- For Powdered Samples: A small amount of the CNT powder can be pressed onto a glass slide.[11]
- For Dispersions:
  - Disperse a small amount of the CNT sample (pristine or functionalized) in a suitable solvent (e.g., deionized water, ethanol, or an organic solvent compatible with the functional groups) at a low concentration (e.g., 0.1 mg/mL).[4]
  - Use a surfactant if necessary to aid dispersion, especially for non-covalently functionalized CNTs.[3][12]
  - Sonicate the dispersion using a bath or probe sonicator to break up bundles and agglomerates. The sonication time should be optimized to achieve good dispersion without damaging the CNTs.[4]
  - Drop-cast a small volume of the dispersion onto a clean, Raman-active substrate, such as a silicon wafer with a silicon dioxide layer (Si/SiO_2).[11]
  - Allow the solvent to evaporate completely in a dust-free environment or under gentle heating.

2. Raman Spectroscopy Measurement:

- Place the prepared sample on the stage of the Raman microscope.
- Select an appropriate laser excitation wavelength. Common choices include 532 nm, 633 nm, and 785 nm. The choice of laser can influence the resonant enhancement of the Raman signal for different CNT chiralities.[11]
- Focus the laser onto the sample surface. It is advisable to start with a low laser power to avoid sample damage, especially for single-walled CNTs.[7]

© 2026 BenchChem. All rights reserved.

- Acquire Raman spectra from multiple, randomly selected points on the sample to ensure the data is representative of the bulk material.[1]
- Set the acquisition parameters (e.g., integration time, number of accumulations) to achieve a good signal-to-noise ratio.

3. Data Analysis:

- Perform a baseline correction on the raw spectra to remove any background fluorescence.
- Use a curve-fitting software to fit the D and G bands with appropriate peak functions (e.g., Lorentzian, Gaussian, or a combination). This allows for accurate determination of the peak intensity, position, and full width at half maximum (FWHM).
- Calculate the I(D)/I(G) ratio by dividing the integrated intensity of the D-band by that of the G-band.
- Compare the I(D)/I(G) ratio, G-band position, and G-band FWHM of the functionalized CNTs with those of the pristine CNTs to determine the nature and extent of functionalization.

A Self-Validating System: Ensuring Trustworthy Results

The protocol described above is designed to be a self-validating system. By always analyzing a pristine (unfunctionalized) sample of the same CNT material alongside the functionalized samples, you establish a baseline for comparison. Any observed changes in the Raman spectrum of the functionalized sample can then be confidently attributed to the functionalization process. Furthermore, acquiring spectra from multiple points on each sample and averaging the results helps to mitigate the effects of sample heterogeneity and provides a statistically robust assessment of the functionalization.

Logical Relationships in Raman Analysis of CNT Functionalization

© 2026 BenchChem. All rights reserved.

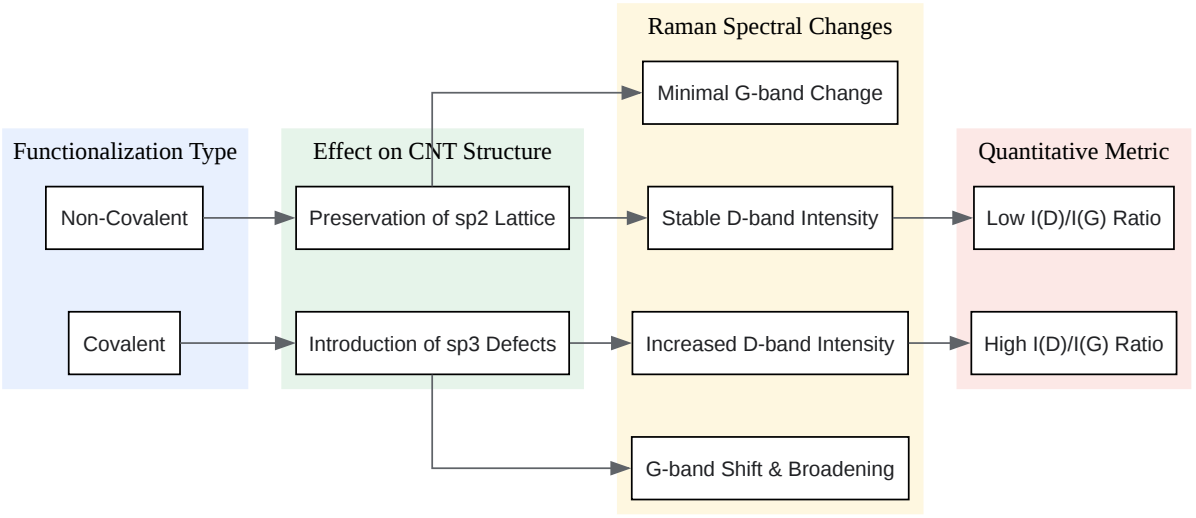

Click to download full resolution via product page

Caption: Logical relationships between functionalization type and Raman spectral changes.

Conclusion

Raman spectroscopy is an indispensable tool for the characterization of functionalized carbon nanotubes. Its sensitivity to the structural integrity of the CNT lattice allows for a clear and quantitative distinction between covalent and non-covalent functionalization. By carefully following a systematic experimental protocol and analyzing the key features of the Raman spectrum—most notably the I(D)/I(G) ratio—researchers can confidently verify the success of their functionalization strategies, paving the way for the development of novel and impactful applications in medicine and materials science.

References

- Rebelo, S. L. H., et al. (2018). Progress in the Raman spectra analysis of covalently functionalized multiwalled carbon nanotubes: unraveling disorder in graphitic materials. Physical Chemistry Chemical Physics, 20(41), 26343-26355. [Link]

© 2026 BenchChem. All rights reserved.

- Bokova, S. N., et al. (2018). Surface-Enhanced Raman Spectroscopy Characterization of Pristine and Functionalized Carbon Nanotubes and Graphene. In Raman Spectroscopy. IntechOpen. [Link]
- Hvizdoš, P., et al. (2013). Raman spectra of raw and functionalised CNTs. ResearchGate. [Link]
- Jorio, A., et al. (2021). Raman spectroscopy for carbon nanotube applications. Journal of Applied Physics, 129(2), 021102. [Link]
- Beard, J. D., et al. (2018). Quantification of Carbon Nanotubes by Raman Analysis. Annals of Work Exposures and Health, 62(5), 576-588. [Link]
- B&W Tek. (2018). Characterizing Carbon Nanomaterials with a Raman Analyzer. AZoM. [Link]
- Papadopoulos, C., et al. (2006). Raman study of multiwalled carbon nanotubes functionalized with oxygen groups. Journal of Applied Physics, 99(5), 054307. [Link]
- B&W Tek. (2018). Characterizing Carbon Nanomaterials with a Raman Analyzer. AZoM. [Link]
- Thermo Fisher Scientific. (2010). Introduction to Raman Spectroscopy as a Characterization Tool for Carbon Nanotubes, Graphene, and other Carbon Nanostructures. TechConnect Briefs, 1, 318-321. [Link]
- Wall, M. (2011). Representative Raman measurements of carbon nanotubes. Spectroscopy Europe, 23(6), 18-21. [Link]
- Ali, M. A., et al. (2019). Trend of FWHM of G-band in Raman spectra of MWCNT samples synthesized... ResearchGate. [Link]
- Singh, P., et al. (2012). A study on the effect of different chemical routes on functionalization of MWCNTs by various groups (-COOH, -SO3H). Nanoscale Research Letters, 7(1), 503. [Link]

© 2026 BenchChem. All rights reserved.

- Milani, A., et al. (2010). Experimental Raman spectra of carbon solids and nanostructures. ResearchGate. [Link]
- de la Torre, B. G., et al. (2021). Automated statistical analysis of Raman spectra of nanomaterials. ChemRxiv. [Link]
- Holt, J. M., et al. (2007). Raman Spectroscopic Investigation of Individual Single-Walled Carbon Nanotubes Helically Wrapped by Ionic, Semiconducting Polymers. The Journal of Physical Chemistry C, 111(48), 17847-17853. [Link]
- Olevik, D. (2016). Laser induced effects in carbon nanotubes : implications for Raman characterization of functionalized systems. Diva-portal.org. [Link]
- Stanczyk, M., et al. (2021). Covalently bonded surface functional groups on carbon nanotubes: from molecular modeling to practical applications. RSC Advances, 11(29), 17742-17753. [Link]
- Giarola, M., et al. (2014). Non-covalent and reversible functionalization of carbon nanotubes. Beilstein Journal of Nanotechnology, 5, 178-192. [Link]
- Varga, C., et al. (2014). Non-Covalent Functionalization of Carbon Nanotubes with Surfactants for Pharmaceutical Applications - A Critical Mini-Review. Current Pharmaceutical Design, 20(4), 575-586. [Link]

- Giarola, M., et al. (2014). Non-covalent and reversible functionalization of carbon nanotubes. Beilstein Journal of Nanotechnology, 5, 178-192. [Link]

- Hirsch, A., & Vostrowsky, O. (2007). Raman spectroscopy on chemically functionalized carbon nanotubes. physica status solidi (b), 244(11), 4291-4295. [Link]

Need Custom Synthesis?

BenchChem offers custom synthesis for rare earth carbides and specific isotopiclabeling.

Email: info@benchchem.com or Request Quote Online.

Sources

- 1. spectroscopyworld.com [spectroscopyworld.com]
- 2. pubs.aip.org [pubs.aip.org]
- 3. BJNANO - Non-covalent and reversible functionalization of carbon nanotubes [beilstein-journals.org]
- 4. researchgate.net [researchgate.net]
- 5. researchgate.net [researchgate.net]
- 6. books.rsc.org [books.rsc.org]
- 7. azom.com [azom.com]
- 8. pubs.aip.org [pubs.aip.org]
- 9. researchgate.net [researchgate.net]
- 10. pubs.acs.org [pubs.acs.org]
- 11. documents.thermofisher.com [documents.thermofisher.com]
- 12. eurekaselect.com [eurekaselect.com]

- To cite this document: BenchChem. [A Researcher's Guide to Verifying Carbon Nanotube Functionalization with Raman Spectroscopy]. BenchChem, [2026]. [Online PDF]. Available at: [https://www.benchchem.com/product/b8244295/docs#a-researcher-s-guide-to-verifying-carbon-nanotube-functionalization-with-raman-spectroscopy]

Disclaimer & Data Validity:

The information provided in this document is for Research Use Only (RUO) and is strictly not intended for diagnostic or therapeutic procedures. While BenchChem strives to provide accurate protocols, we make no warranties, express or implied, regarding the fitness of this product for every specific experimental setup.

Technical Support: The protocols provided are for reference purposes. Unsure if this reagent suits your experiment?

Need Industrial/Bulk Grade? Request Custom Synthesis Quote

© 2026 BenchChem. All rights reserved.

BenchChem

Our mission is to be the trusted global source of essential and advanced chemicals, empowering scientists and researchers to drive progress in science and industry.

Contact

Address: 3281 E Guasti Rd

Ontario, CA 91761, United States

Phone: (601) 213-4426

Email: info@benchchem.com

Contact our Ph.D. Support Team for a compatibility check

© 2026 BenchChem. All rights reserved.