Technical Support Center: Minimizing Off-Target Effects of Tz-Thalidomide-Based Degraders

Author: BenchChem Technical Support Team. **Date**: April 2026

Compound of Interest

Compound Name: *Tz-Thalidomide*

Cat. No.: *B8237385*

Get Quote

This technical support center provides researchers, scientists, and drug development professionals with troubleshooting guides and frequently asked questions (FAQs) to address common issues encountered during experiments with **Tz-Thalidomide**-based degraders. Our goal is to help you minimize off-target effects and ensure the accuracy and reliability of your results.

Frequently Asked Questions (FAQs)

Q1: What are the primary mechanisms leading to off-target effects with **Tz-Thalidomide**-based degraders?

A1: Off-target effects with **Tz-Thalidomide**-based degraders, which utilize Cereblon (CRBN) as the E3 ligase recruiter, can arise from several factors:

- CRBN Neosubstrate Degradation: The thalidomide moiety itself can induce the degradation of endogenous proteins, known as neosubstrates, that are not the intended target. Notable examples include zinc finger proteins like SALL4 and IKZF1/3.[1][2][3][4]
- Ternary Complex Off-Targets: The degrader may induce the formation of alternative ternary complexes involving the target protein and a different E3 ligase, or CRBN with an unintended

© 2026 BenchChem. All rights reserved.

protein. The linker composition and length play a critical role in the stability and geometry of the ternary complex, influencing which proteins are presented for ubiquitination.[5][6]

- Binary Complex Off-Targets: The warhead (targeting the protein of interest) or the E3 ligase ligand may have off-target binding partners, leading to unintended biological consequences independent of protein degradation.

Q2: What is the "hook effect" and how can I mitigate it?

A2: The "hook effect" is a phenomenon observed in dose-response experiments where high concentrations of a degrader lead to reduced degradation of the target protein.[5][7] This occurs because at excessive concentrations, the formation of binary complexes (degrader-target or degrader-CRBN) is favored over the productive ternary complex (target-degrader-CRBN), thus inhibiting degradation.[5][8]

To mitigate the hook effect, it is crucial to perform a dose-response experiment with a wide range of degrader concentrations (e.g., 1 nM to 10 µM) to identify the optimal concentration that achieves maximal degradation.[5][7]

Q3: How can I improve the selectivity of my **Tz-Thalidomide**-based degrader?

A3: Improving the selectivity of your degrader is key to minimizing off-target effects. Here are several strategies:

- Optimize the Target-Binding Warhead: Employ a more selective ligand for your protein of interest to reduce off-target binding.[6]

- Modify the Linker: Systematically vary the length, rigidity, and composition of the linker. The linker significantly influences the conformation of the ternary complex and can be optimized to favor the on-target interaction.[6][9]

- Modify the E3 Ligase Ligand: Introducing modifications to the thalidomide moiety can reduce the degradation of known off-target neosubstrates. For instance, substitutions at the C5 position of the phthalimide ring have been shown to decrease the degradation of zinc-finger proteins.[2]

© 2026 BenchChem. All rights reserved.

- Change the E3 Ligase: If off-target effects related to CRBN are problematic, consider using a degrader that recruits a different E3 ligase, such as VHL. Different E3 ligases have distinct sets of endogenous substrates.[6]

Troubleshooting Guide

© 2026 BenchChem. All rights reserved.

Problem	Possible Cause	Recommended Solution
No or weak target protein degradation observed.	1. Suboptimal Degrader Concentration: The concentration may be too low or in the "hook effect" range.[7] 2. Insufficient Incubation Time: The treatment duration may be too short for degradation to occur.[7] 3. Low CRBN Expression: The cell line may have low endogenous levels of Cereblon (CRBN).[5][8] 4. Poor Cell Permeability: The degrader may not be efficiently entering the cells.[9][10] 5. Compound Instability: The degrader may be unstable in the cell culture medium.[6]	1. Perform a dose-response experiment with a wide concentration range (e.g., 1 nM to 10 µM).[7] 2. Conduct a time-course experiment (e.g., 2, 4, 8, 16, 24 hours).[7] 3. Confirm CRBN expression levels using Western Blot or qPCR.[5] 4. Assess cell permeability using assays like the Cellular Thermal Shift Assay (CETSA).[5][10] 5. Evaluate compound stability using LC-MS/MS.[5]
Significant off-target protein degradation observed.	1. Degradation of CRBN Neosubstrates: The thalidomide moiety is inducing degradation of known off-targets.[1][2] 2. Lack of Specificity: The warhead or linker design is promoting off-target ternary complex formation.[6]	1. Use the lowest effective concentration of the degrader.[7] 2. Perform washout experiments to confirm the phenotype is linked to on-target degradation.[7] 3. Redesign the degrader with a modified thalidomide ligand or a more specific warhead.[2][6] 4. Conduct global proteomics to identify all degraded proteins.[9][11][12]
Inconsistent results between experiments.	1. Variable Cell Culture Conditions: Cell passage number, confluency, or health can affect the ubiquitin-proteasome system.[6] 2. Poor Compound Solubility: The	1. Standardize cell culture protocols, including passage number and seeding density.[6] 2. Measure the kinetic solubility of the degrader and consider using formulation

© 2026 BenchChem. All rights reserved.

	degrader may be precipitating in the assay medium.[13]	strategies if solubility is low.[13]

Quantitative Data Summary

Table 1: Binding Affinities of Immunomodulatory Drugs (IMiDs) to CRBN

Compound	Binding Affinity (Kd) to CRBN	Method
Thalidomide	~1.8 µM	Isothermal Titration Calorimetry (ITC)[14]
Lenalidomide	~0.7 µM	Isothermal Titration Calorimetry (ITC)[14]
Pomalidomide	~0.3 µM	Isothermal Titration Calorimetry (ITC)[14]
(S)-thalidomide	~10-fold stronger than (R)-thalidomide	Biochemical assays[14]

Table 2: Neosubstrate Degradation Profile of a Representative Thalidomide-Based PROTAC (dBET1)

Target Protein	DC50	Dmax	Cell Line
BRD4	8 nM	>98%	22Rv1[14]
BRD3	19 nM	>95%	22Rv1[14]
BRD2	34 nM	>95%	22Rv1[14]

DC50: Concentration for 50% maximal degradation; Dmax: Maximum percentage of degradation.

Experimental Protocols

Western Blotting for Target Protein Degradation

© 2026 BenchChem. All rights reserved.

This protocol is used to quantify the extent of target protein degradation following treatment with a **Tz-Thalidomide**-based degrader.

- Cell Seeding and Treatment: Plate cells at a density that will result in 70-80% confluency at the time of harvest. Treat cells with a range of degrader concentrations and a vehicle control (e.g., DMSO) for the desired incubation time.
- Cell Lysis: Wash cells with ice-cold PBS and lyse them in RIPA buffer supplemented with protease and phosphatase inhibitors.
- Protein Quantification: Determine the protein concentration of each lysate using a BCA assay.
- SDS-PAGE and Western Blotting:
  - Load equal amounts of protein per lane on an SDS-PAGE gel.
  - Transfer the separated proteins to a PVDF or nitrocellulose membrane.[5]
  - Block the membrane with 5% non-fat milk or BSA in TBST for 1 hour.[5]
  - Incubate the membrane with a primary antibody specific to the target protein overnight at 4°C.
  - Wash the membrane and incubate with an HRP-conjugated secondary antibody for 1 hour.[5]
- Detection and Analysis:
  - Visualize the protein bands using an enhanced chemiluminescence (ECL) substrate.[5][7]
  - Quantify the band intensities and normalize to a loading control (e.g., GAPDH or β-actin) to determine the percentage of remaining protein.[5][7]

Global Proteomics using Tandem Mass Tag (TMT) Labeling

© 2026 BenchChem. All rights reserved.

This protocol provides an unbiased, proteome-wide assessment of a degrader's efficacy and selectivity.[15]

- Sample Preparation: Treat cells with the optimal concentration of the degrader and a vehicle control. A shorter incubation time (e.g., 6-8 hours) is recommended to enrich for direct degradation targets.[7][9] Harvest and lyse the cells.
- Protein Digestion and TMT Labeling:
  - Quantify the protein and digest it into peptides using trypsin.[7]
  - Label the peptides from each condition with a different TMT reagent according to the manufacturer's protocol.[1]
- LC-MS/MS Analysis:
  - Combine the labeled peptide samples.
  - Analyze the peptide mixture using liquid chromatography coupled to tandem mass spectrometry (LC-MS/MS).[7]
- Data Analysis:
  - Use proteomics software (e.g., MaxQuant, Proteome Discoverer) to identify and quantify proteins.[1][7]
  - Compare the protein abundance between the treated and control samples to identify significantly downregulated proteins, which represent both on-target and off-target effects.[7]

Visualizations

© 2026 BenchChem. All rights reserved.

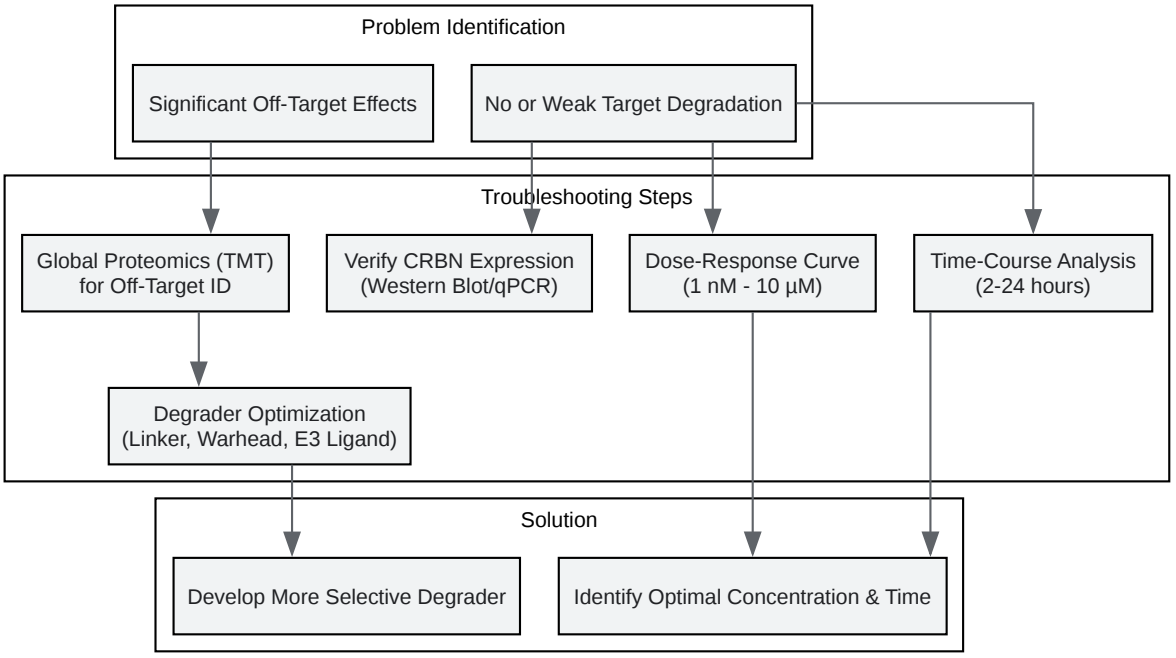

Click to download full resolution via product page

Caption: Troubleshooting workflow for **Tz-Thalidomide** degrader experiments.

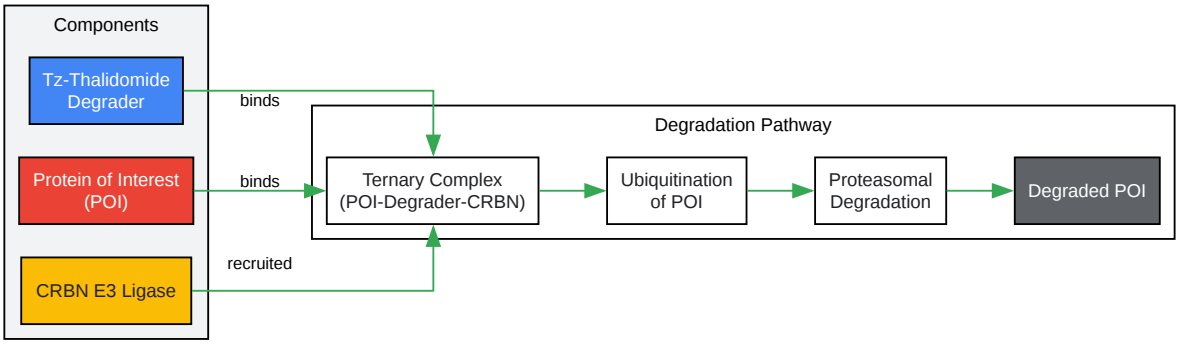

Click to download full resolution via product page

© 2026 BenchChem. All rights reserved.

Caption: Mechanism of action for **Tz-Thalidomide**-based protein degradation.

Need Custom Synthesis?

BenchChem offers custom synthesis for rare earth carbides and specific isotopiclabeling.

Email: info@benchchem.com or Request Quote Online.

References

- 1. benchchem.com [benchchem.com]
- 2. Proteolysis-targeting chimeras with reduced off-targets - PMC [pmc.ncbi.nlm.nih.gov]
- 3. Cancer therapies based on targeted protein degradation — lessons learned with lenalidomide - PMC [pmc.ncbi.nlm.nih.gov]
- 4. researchgate.net [researchgate.net]
- 5. benchchem.com [benchchem.com]
- 6. benchchem.com [benchchem.com]
- 7. benchchem.com [benchchem.com]
- 8. benchchem.com [benchchem.com]
- 9. Targeted Protein Degradation: Design Considerations for PROTAC Development - PMC [pmc.ncbi.nlm.nih.gov]
- 10. benchchem.com [benchchem.com]
- 11. PROTAC Drug Off-Target Protein Assessment Service | MtoZ Biolabs [mtoz-biolabs.com]
- 12. sapient.bio [sapient.bio]
- 13. benchchem.com [benchchem.com]
- 14. benchchem.com [benchchem.com]
- 15. benchchem.com [benchchem.com]
- To cite this document: BenchChem. [Technical Support Center: Minimizing Off-Target Effects of Tz-Thalidomide-Based Degraders]. BenchChem, [2026]. [Online PDF]. Available at: [https://www.benchchem.com/product/b8237385/docs#technical-support-center-minimizing-off-target-effects-of-tz-thalidomide-based-degraders]

© 2026 BenchChem. All rights reserved.

Disclaimer & Data Validity:

The information provided in this document is for Research Use Only (RUO) and is strictly not intended for diagnostic or therapeutic procedures. While BenchChem strives to provide accurate protocols, we make no warranties, express or implied, regarding the fitness of this product for every specific experimental setup.

Technical Support: The protocols provided are for reference purposes. Unsure if this reagent suits your experiment?

Need Industrial/Bulk Grade? Request Custom Synthesis Quote

BenchChem

Our mission is to be the trusted global source of essential and advanced chemicals, empowering scientists and researchers to drive progress in science and industry.

Contact

Address: 3281 E Guasti Rd

Ontario, CA 91761, United States

Phone: (601) 213-4426

Email: info@benchchem.com

Contact our Ph.D. Support Team for a compatibility check

© 2026 BenchChem. All rights reserved.