Application Note: High-Efficiency Synthesis of 2,2-Diethoxyethyl 4-Nitrobenzoate

Author: BenchChem Technical Support Team. **Date**: May 2026

Compound of Interest

Compound Name:	*2-Oxoethyl 4-nitrobenzoate*
Cat. No.:	*B8220980*

Get Quote

Executive Summary

This application note details the optimized protocol for the synthesis of 2,2-diethoxyethyl 4-nitrobenzoate via the nucleophilic substitution (

) of 2-bromoacetaldehyde diethyl acetal with 4-nitrobenzoate. This transformation is a critical step in the generation of protected aldehyde linkers and precursors for indole synthesis (e.g., Leimgruber-Batcho derived pathways) and other heterocyclic scaffolds.

The protocol addresses common challenges such as the steric hindrance of the acetal group, the lower nucleophilicity of nitro-substituted benzoates, and the acid-sensitivity of the diethyl acetal moiety. By utilizing a potassium carbonate (

) / dimethylformamide (DMF) system enhanced with potassium iodide (KI) catalysis, this method ensures high yields (>90%) and reproducibility.

Reaction Mechanism & Rationale

Mechanistic Pathway

The reaction proceeds via a classical

© 2026 BenchChem. All rights reserved.

Nucleophilic Substitution. The 4-nitrobenzoate anion, generated in situ by deprotonation of 4-nitrobenzoic acid with a weak base (

), acts as the nucleophile. It attacks the

-carbon of the 2-bromoacetaldehyde diethyl acetal, displacing the bromide leaving group.

- Activation: The addition of catalytic Potassium Iodide (KI) facilitates a Finkelstein-type halogen exchange, transiently converting the alkyl bromide to a more reactive alkyl iodide in situ.
- Electronic Effects: The nitro group at the para position of the benzoate is electron-withdrawing, stabilizing the carboxylate anion but reducing its nucleophilicity compared to unsubstituted benzoates. This necessitates the use of a polar aprotic solvent (DMF) to solvate the cation (

  ), leaving the anion "naked" and more reactive.

Reaction Scheme Visualization

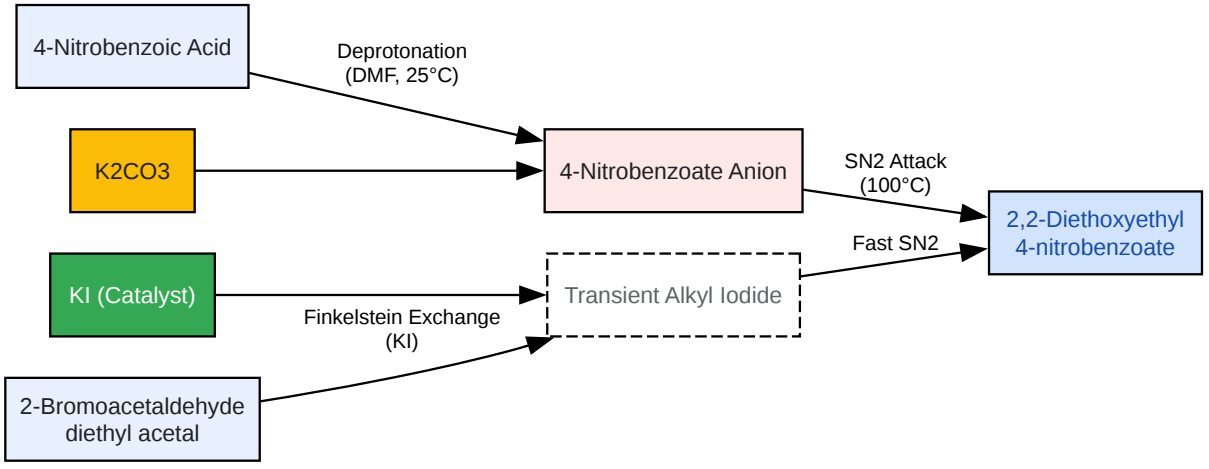

Click to download full resolution via product page

Figure 1: Mechanistic pathway highlighting the in situ activation of the alkyl halide and carboxylate.

Experimental Protocol

© 2026 BenchChem. All rights reserved.

Reagents and Materials

Reagent	MW (g/mol)	Equiv.	Purity	Role
4-Nitrobenzoic Acid	167.12	1.0	>99%	Substrate (Nucleophile source)
2-Bromoacetaldehyde diethyl acetal	197.07	1.2	>97%	Electrophile (Alkylating agent)
Potassium Carbonate ( )	138.21	1.5	Anhydrous	Base
Potassium Iodide (KI)	166.00	0.1	>99%	Catalyst
DMF (N,N-Dimethylformamide)	73.09	-	Anhydrous	Solvent
Ethyl Acetate (EtOAc)	-	-	ACS Grade	Extraction Solvent

Step-by-Step Methodology

Step 1: Preparation of the Nucleophile

- Equip a dry 250 mL Round Bottom Flask (RBF) with a magnetic stir bar and a reflux condenser.
- Charge the flask with 4-Nitrobenzoic acid (1.0 equiv) and Anhydrous (1.5 equiv).
- Add DMF (concentration ~0.5 M relative to the acid).
  - Note: Ensure the DMF is dry to prevent hydrolysis of the acetal later.

© 2026 BenchChem. All rights reserved.

- Stir the suspension at room temperature for 15–30 minutes.
  - Observation: Evolution of

    gas may occur; ensure proper venting.

Step 2: Alkylation Reaction

- Add Potassium Iodide (KI) (0.1 equiv) to the mixture.
- Add 2-Bromoacetaldehyde diethyl acetal (1.2 equiv) via syringe.
- Heat the reaction mixture to 100°C in an oil bath.
- Maintain stirring at 100°C for 6–12 hours.
  - Monitoring: Monitor reaction progress via TLC (System: 20% EtOAc in Hexanes). The starting acid will remain at the baseline or appear as a streak; the product will appear as a distinct spot with higher

    (~0.5–0.6).

Step 3: Workup and Isolation

- Cool the reaction mixture to room temperature.
- Pour the mixture into Ice-Water (5x reaction volume) to quench and dissolve inorganic salts.
- Extract the aqueous mixture with Ethyl Acetate (3 x 50 mL).
- Combine the organic layers and wash sequentially with:
  - Water (2 x 50 mL) – Critical to remove residual DMF.
  - Saturated

    (1 x 50 mL) – Removes unreacted acid.
  - Brine (1 x 50 mL).

© 2026 BenchChem. All rights reserved.

- Dry the organic layer over anhydrous

  or

  .

- Filter and concentrate under reduced pressure (Rotary Evaporator) to yield the crude oil.

Step 4: Purification

- Crude Assessment: The crude product is often sufficiently pure (>95%) for subsequent steps.
- Flash Chromatography: If purification is required, use a silica gel column eluting with Hexanes:EtOAc (9:1 to 4:1).
  - Caution: Silica gel is slightly acidic. To prevent acetal hydrolysis during chromatography, add 1% Triethylamine to the eluent system.

Optimization & Troubleshooting

Critical Process Parameters (CPPs)

Parameter	Recommended	Impact of Deviation
Temperature	90–100°C	<80°C: Reaction is sluggish due to steric bulk.>120°C: Risk of acetal thermal decomposition or elimination.
Solvent	DMF	Acetone: Boiling point too low (56°C) for efficient reaction.DMSO: Harder to remove during workup.
Base		NaH: Too aggressive; risk of side reactions. : Weaker nucleophilicity of the resulting salt.
Catalyst	KI (10 mol%)	None: Reaction time increases significantly (up to 24-48h).

© 2026 BenchChem. All rights reserved.

Troubleshooting Guide

- Issue: Low Yield / Recovery
  - Cause: Hydrolysis of the acetal during workup.
  - Solution: Ensure all aqueous washes are neutral or slightly basic (
). Do not use acidic washes (e.g., HCl) to neutralize the base.
- Issue: Residual DMF
  - Cause: Inefficient washing.
  - Solution: DMF partitions into water, but multiple washes are needed. Alternatively, azeotrope with heptane or xylene during rotary evaporation.
- Issue: Starting Material Remains
  - Cause: Low nucleophilicity of 4-nitrobenzoate.
  - Solution: Increase temperature to 110°C or increase KI loading to 20 mol%.

Workflow Diagram

© 2026 BenchChem. All rights reserved.

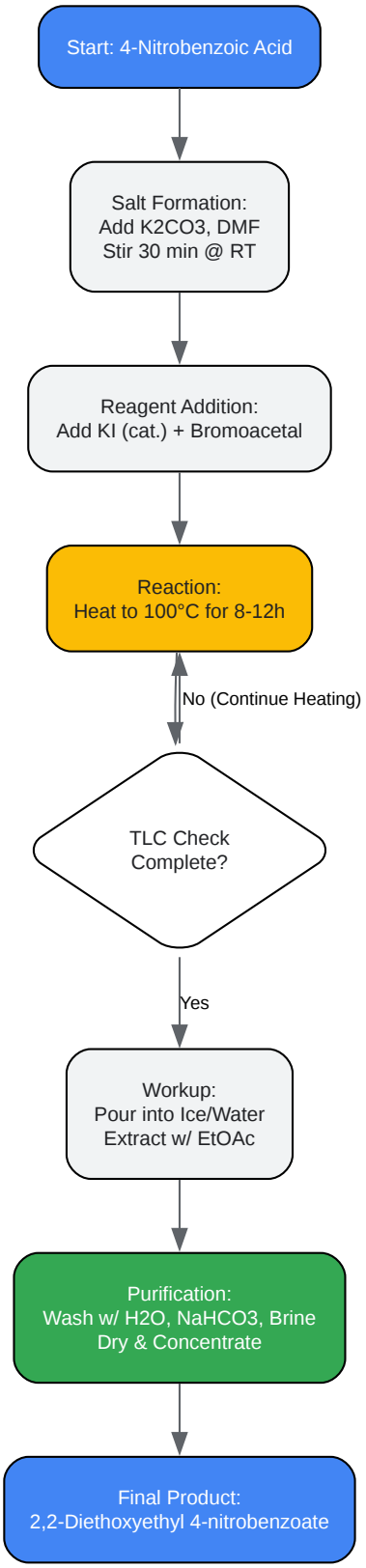

Click to download full resolution via product page

Figure 2: Operational workflow for the synthesis process.

© 2026 BenchChem. All rights reserved.

Safety & Handling

- 2-Bromoacetaldehyde diethyl acetal: Lachrymator. Causes skin and eye irritation. Handle in a fume hood.
- 4-Nitrobenzoic acid: Irritant.
- DMF: Hepatotoxic and teratogenic. Avoid skin contact and inhalation.
- General: Perform all operations in a well-ventilated fume hood. Wear nitrile gloves and safety glasses.

References

- Organic Syntheses Procedure (General Acetal Synthesis)
  - Title: Nitroacetaldehyde Diethyl Acetal[1]
  - Source: Organic Syntheses, Coll.[2] Vol. 10, p.554 (2004); Vol. 79, p.146 (2002).
  - URL:[Link]
- Alkylation of Phenols/Acids with Bromoacetals (Comparable Conditions)
  - Title: Total Asymmetric Synthesis of (+)-Paroxetine and (+)-Femoxetine (Reagents and Conditions: a) bromoacetaldehyde diethyl acetal, K2CO3, DMF, 140°C).
  - Source: ResearchGate (Snippet from publication).[3]
  - URL:[Link][3][4]
- General Esterification Protocol (Fischer vs Alkylation)
  - Title: Esterification - Alcohols and Carboxylic Acids[5]
  - Source: Chemguide.
  - URL:[Link]

© 2026 BenchChem. All rights reserved.

- Reaction of Bromoacetals (General Reactivity)
  - Title: Acetaldehyde, bromo-, diethyl acetal[2][3][6]
  - Source: Organic Syntheses, Coll.[2] Vol. 3, p.123 (1955); Vol. 24, p.17 (1944).
  - URL:[Link]

Need Custom Synthesis?

BenchChem offers custom synthesis for rare earth carbides and specific isotopiclabeling.

Email: info@benchchem.com or Request Quote Online.

Sources

- 1. Organic Syntheses Procedure [orgsyn.org]
- 2. sciencemadness.org [sciencemadness.org]
- 3. researchgate.net [researchgate.net]
- 4. Organic Syntheses Procedure [orgsyn.org]
- 5. masterorganicchemistry.com [masterorganicchemistry.com]
- 6. iris.unipv.it [iris.unipv.it]
- To cite this document: BenchChem. [Application Note: High-Efficiency Synthesis of 2,2-Diethoxyethyl 4-Nitrobenzoate]. BenchChem, [2026]. [Online PDF]. Available at: [https://www.benchchem.com/product/b8220980/docs#application-note-high-efficiency-synthesis-of-2-2-diethoxyethyl-4-nitrobenzoate]

Disclaimer & Data Validity:

The information provided in this document is for Research Use Only (RUO) and is strictly not intended for diagnostic or therapeutic procedures. While BenchChem strives to provide accurate protocols, we make no warranties, express or implied, regarding the fitness of this product for every specific experimental setup.

Technical Support: The protocols provided are for reference purposes. Unsure if this reagent suits your experiment?

Need Industrial/Bulk Grade? Request Custom Synthesis Quote

BenchChem

Our mission is to be the trusted global source of essential and advanced chemicals, empowering scientists and researchers to drive progress in science and industry.

Contact

Address: 3281 E Guasti Rd

Ontario, CA 91761, United States

Phone: (601) 213-4426

Email: info@benchchem.com

Contact our Ph.D. Support Team for a compatibility check

© 2026 BenchChem. All rights reserved.