# Application Notes and Protocols for Creating Magnetic Tunnel Junctions with $CrI_3$

**Author**: BenchChem Technical Support Team. **Date**: May 2026

***Compound of Interest***

| | |
|---|---|
| *Compound Name:* | *Triiodochromium* |
| *CAS No.:* | *13569-75-0* |
| *Cat. No.:* | *B082391* |

*Get Quote*

## Introduction: The Dawn of 2D Spintronics with Chromium Triiodide

The advent of two-dimensional (2D) materials has invariably reshaped the landscape of condensed matter physics and materials science. Within this realm, the isolation of atomically thin magnetic crystals, such as chromium triiodide ($CrI_3$), has opened a new frontier in spintronics. $CrI_3$ is a layered van der Waals (vdW) material that exhibits intrinsic ferromagnetism down to a single monolayer, a rarity that makes it a compelling candidate for next-generation spintronic devices.[1] These devices leverage the spin of an electron, in addition to its charge, to store and process information, promising enhanced performance and reduced power consumption.

A cornerstone of spintronic technology is the magnetic tunnel junction (MTJ), a device comprising two ferromagnetic electrodes separated by a thin insulating tunnel barrier.[2] The electrical resistance of an MTJ is contingent on the relative orientation of the magnetization of the two ferromagnetic layers. A parallel alignment results in a low-resistance state, while an antiparallel alignment yields a high-resistance state. This disparity in resistance, known as the tunneling magnetoresistance (TMR) effect, is the fundamental principle behind the operation of

© 2026 BenchChem. All rights reserved.

MTJs in applications like magnetic random-access memory (MRAM) and magnetic field sensors.

$CrI_3$-based MTJs are particularly intriguing due to their potential for exceptionally large TMR ratios. This is attributed to the spin-filtering effect, where the $CrI_3$ tunnel barrier preferentially allows the passage of electrons with a specific spin orientation. The number of $CrI_3$ layers plays a crucial role in the magnetic properties of the device, with bilayer $CrI_3$ exhibiting antiferromagnetic coupling between the layers, which can be overcome by an external magnetic field to achieve a ferromagnetic state. This layer-dependent magnetism allows for the engineering of unique magnetic and transport properties.

This application note provides a comprehensive guide for researchers, scientists, and professionals in drug development on the fabrication and characterization of magnetic tunnel junctions utilizing $CrI_3$. We will delve into the fundamental principles, provide detailed, field-proven protocols, and offer insights into the causality behind experimental choices, ensuring a trustworthy and authoritative resource for advancing research in this exciting field.

## Fundamental Principles: Spin-Dependent Tunneling in $CrI_3$ Heterostructures

The operation of a $CrI_3$-based MTJ is rooted in the principles of quantum mechanical tunneling and the spin-dependent electronic structure of $CrI_3$. The TMR is a direct consequence of the conservation of spin during the tunneling process.

The TMR ratio is defined as:

$$TMR (\%) = [(R_{AP} - R_P) / R_P] * 100$$

where $R_{AP}$ is the resistance in the antiparallel magnetization state and $R_P$ is the resistance in the parallel magnetization state.

In a conventional MTJ with ferromagnetic metal electrodes, the TMR is primarily determined by the spin polarization of the density of states at the Fermi level of the electrodes. However, in a $CrI_3$-based MTJ, the $CrI_3$ itself acts as a spin-filter tunnel barrier. This means that the tunneling probability of an electron is highly dependent on its spin orientation relative to the magnetization of the $CrI_3$ layers.

© 2026 BenchChem. All rights reserved.

The spin-filtering efficiency of the $CrI_3$ barrier is a key determinant of the TMR ratio. Thicker $CrI_3$ barriers, comprising multiple layers, have been shown to exhibit significantly enhanced TMR, with experimental values reaching thousands of percent. This is attributed to the layer-by-layer antiferromagnetic ordering in pristine few-layer $CrI_3$, which can be manipulated with an external magnetic field to achieve different magnetic states, each with a distinct resistance.

The following diagram illustrates the fundamental concept of a $CrI_3$-based MTJ:

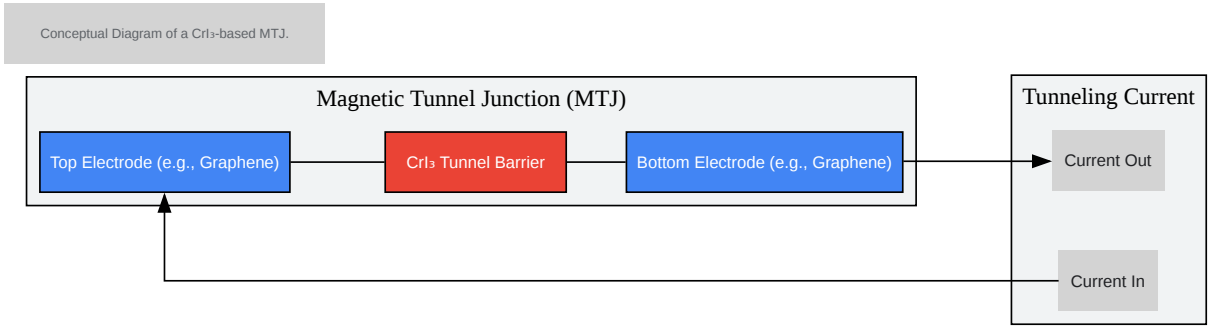


Click to download full resolution via product page

Caption: Conceptual Diagram of a $CrI_3$-based MTJ.

# Fabrication Protocols: From Bulk Crystal to Functional Device

The fabrication of high-quality $CrI_3$-based MTJs is a meticulous process that demands a controlled environment and precise manipulation of atomically thin materials. The following protocols outline the key steps, from the exfoliation of $CrI_3$ flakes to the final device assembly. All fabrication steps involving $CrI_3$ should be performed in an inert atmosphere (e.g., a nitrogen or argon-filled glovebox) to prevent degradation of the material.[1]

## Substrate Preparation

© 2026 BenchChem. All rights reserved.

The choice and preparation of the substrate are critical for the successful fabrication of vdW heterostructures. Silicon wafers with a thermally grown silicon dioxide ($SiO_2$) layer are commonly used.

- Protocol:
  - Start with a $Si/SiO_2$ substrate (typically with a 285 nm or 300 nm oxide layer for optimal optical contrast of 2D materials).
  - Clean the substrate by sonicating in acetone for 10 minutes, followed by isopropanol for 10 minutes.
  - Rinse the substrate thoroughly with deionized (DI) water.
  - Dry the substrate with a stream of dry nitrogen or by baking on a hotplate at 120°C for 5 minutes.
  - Optional: Treat the substrate with an oxygen plasma for 1-2 minutes to remove any residual organic contaminants and enhance surface hydrophilicity.
- Causality: A clean and smooth substrate surface is essential to ensure good adhesion of the 2D materials and to minimize the introduction of defects and contaminants at the interface, which can adversely affect device performance.[3]

## Mechanical Exfoliation of $CrI_3$ and Graphene

The "Scotch tape" or mechanical exfoliation method is the most common technique for obtaining high-quality, single- and few-layer flakes of 2D materials from their bulk crystals.[4]

- Protocol:
  - Place a piece of high-quality adhesive tape (e.g., blue Nitto tape) onto a bulk $CrI_3$ crystal.
  - Gently peel the tape off the crystal. A thin layer of the crystal will adhere to the tape.
  - Fold the tape onto itself and peel it apart repeatedly to progressively thin the crystal flakes.

© 2026 BenchChem. All rights reserved.

- After several peeling steps, press the tape with the thinned flakes onto the prepared $Si/SiO_2$ substrate.
- Slowly peel the tape off the substrate, leaving behind exfoliated flakes of varying thicknesses.
- Repeat the process for graphene using a highly ordered pyrolytic graphite (HOPG) crystal.

- Expertise & Experience: The number of peeling steps and the pressure applied during transfer are crucial parameters that require practice to optimize for obtaining a high yield of monolayer and few-layer flakes. Visual identification of thin flakes under an optical microscope is a key skill, where color and contrast are indicators of thickness.

## Dry Transfer of 2D Materials for Heterostructure Assembly

The assembly of the MTJ heterostructure (e.g., graphene/$CrI_3$/graphene) is achieved using a dry transfer technique to avoid contamination from solvents. This method typically employs a polymer stamp, such as polydimethylsiloxane (PDMS), often in combination with a thermoplastic polymer like polypropylene carbonate (PPC).[5][6]

- PDMS Stamp Preparation Protocol:
  - Mix PDMS elastomer and curing agent (e.g., Sylgard 184) in a 10:1 ratio by weight.
  - Degas the mixture in a vacuum desiccator to remove air bubbles.
  - Pour the mixture into a petri dish to a desired thickness (e.g., 2-3 mm).
  - Cure the PDMS in an oven at 70°C for 2-3 hours.
  - Cut the cured PDMS into small stamps (e.g., 1 cm x 1 cm) and mount them on glass slides.
- PPC Film Preparation Protocol:
  - Dissolve PPC in a suitable solvent like anisole to form a solution (e.g., 5% by weight).

© 2026 BenchChem. All rights reserved.

- Spin-coat the PPC solution onto a clean Si wafer at a specific speed (e.g., 3000 rpm for 60 seconds) to achieve a desired film thickness.
- Bake the PPC-coated wafer on a hotplate at a temperature below the glass transition temperature of PPC (e.g., 90°C) for a few minutes to evaporate the solvent.

- Dry Transfer "Pick-up and Drop" Protocol:
  - Mount the PDMS stamp on a micromanipulator stage under an optical microscope.
  - Bring the PPC-coated stamp into contact with the target 2D flake (e.g., the top graphene layer) on its original substrate.
  - Heat the stage to a temperature that increases the adhesion of the PPC (e.g., 50-70°C).
  - Quickly retract the stamp to pick up the flake.
  - Align the picked-up flake over the target flake on the substrate (e.g., the $CrI_3$ flake).
  - Slowly bring the stamp into contact with the target flake.
  - Increase the stage temperature to above the glass transition temperature of PPC (e.g., >90°C) to release the flake.
  - Slowly retract the stamp, leaving the transferred flake on top of the target flake.
  - Repeat this process to assemble the complete heterostructure.
  - After the stack is complete, the PPC residue can be removed by annealing in a vacuum or inert atmosphere, or by dissolving in a solvent like chloroform, though the latter may introduce contaminants.

- Trustworthiness: This dry transfer method ensures a clean interface between the layers of the vdW heterostructure, which is crucial for achieving high-performance devices. The temperature control during the pick-up and release steps is critical for a successful transfer.

The following diagram illustrates the dry transfer workflow:

© 2026 BenchChem. All rights reserved.

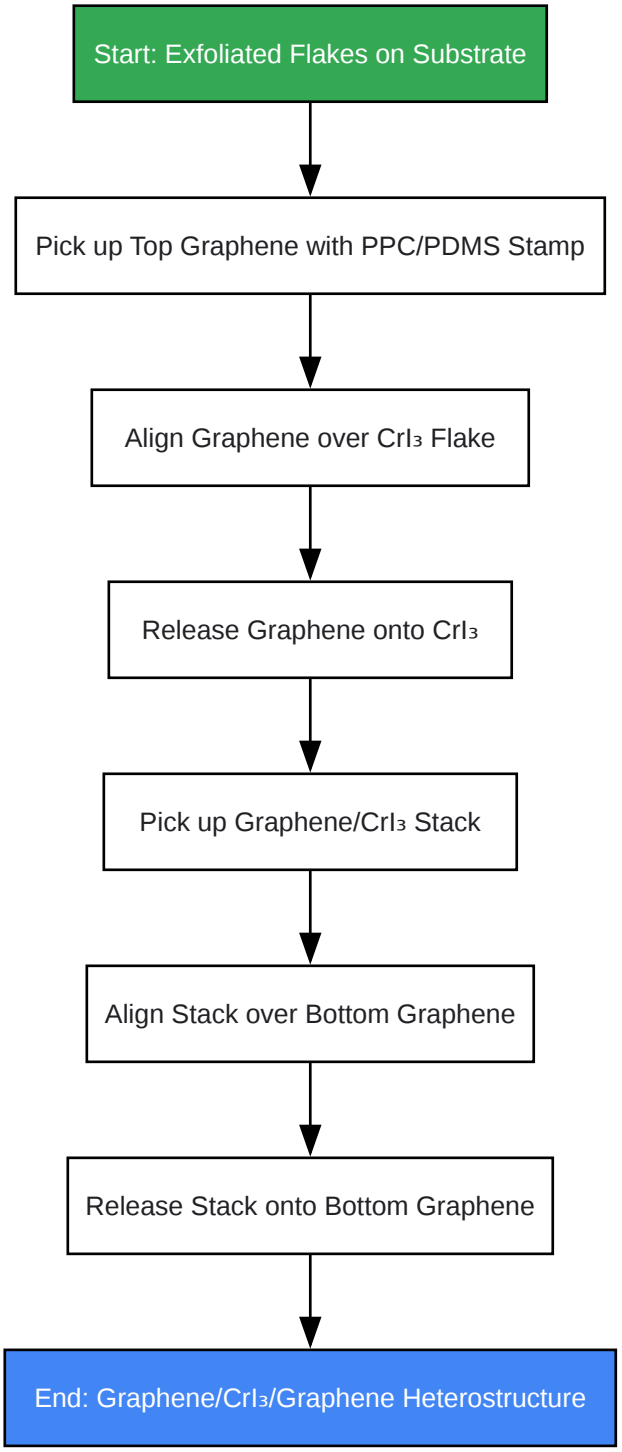


Dry Transfer Workflow for Heterostructure Assembly.

Click to download full resolution via product page

Caption: Dry Transfer Workflow for Heterostructure Assembly.

## Device Patterning and Contact Deposition

© 2026 BenchChem. All rights reserved.

Once the heterostructure is assembled, it needs to be patterned and contacted to create a functional device. This is typically done using standard microfabrication techniques.

- Protocol:
  - Use electron beam lithography (EBL) or photolithography to define the device geometry and contact areas.
  - A common device geometry is a Hall bar or a simple two-terminal structure.
  - After developing the resist, use a reactive ion etching (RIE) process (e.g., with $Ar/CHF_3/O_2$) to etch away the unwanted areas of the heterostructure.
  - Deposit metal contacts (e.g., Cr/Au, 5 nm/50 nm) using electron beam evaporation or sputtering.
  - Perform a lift-off process in a suitable solvent (e.g., acetone) to remove the resist and excess metal, leaving behind the final device with contacts.
- Causality: The choice of contact metals and deposition technique is crucial for achieving low-resistance ohmic contacts to the graphene electrodes, which is essential for accurate transport measurements.

# Characterization Protocols: Probing the Spin-Dependent Transport

After fabrication, the MTJ devices are characterized to evaluate their performance, with the primary metric being the TMR ratio.

## Magneto-transport Measurements

These measurements are performed in a cryostat with a superconducting magnet to control the temperature and the external magnetic field.

- Protocol:
  - Mount the device on a chip carrier and wire-bond the contacts to the carrier's pads.

© 2026 BenchChem. All rights reserved.

- Load the chip carrier into a cryostat with electrical feedthroughs.
- Cool the device down to the desired measurement temperature (typically low temperatures, e.g., 4.2 K, are required to observe the magnetic ordering in $CrI_3$).
- Apply a constant DC or low-frequency AC bias voltage or current across the MTJ.
- Sweep the external magnetic field perpendicular to the plane of the device while measuring the resistance of the junction.
- The magnetic field sweep should cover a range sufficient to switch the magnetization of the $CrI_3$ layers between parallel and antiparallel configurations.
- Record the resistance as a function of the magnetic field to obtain the TMR curve.

- Expertise & Experience: The sweep rate of the magnetic field and the measurement configuration (two-probe vs. four-probe) can affect the measured TMR. A four-probe measurement is preferred to eliminate contact resistance.

The following diagram shows a schematic of the TMR measurement setup:

Schematic of a TMR Measurement Setup.

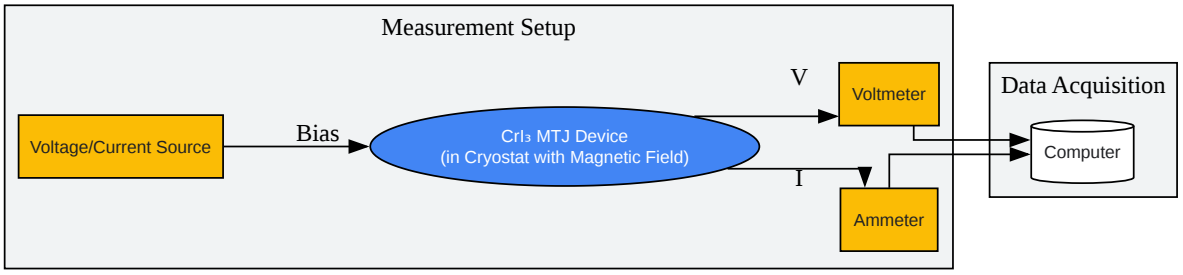


Click to download full resolution via product page

Caption: Schematic of a TMR Measurement Setup.

## Data Analysis

The TMR curve will show distinct resistance states corresponding to different magnetic configurations of the $CrI_3$ layers.

- Analysis Steps:
  - Identify the low-resistance (R_P) and high-resistance (R_AP) states from the TMR curve.
  - Calculate the TMR ratio using the formula provided earlier.
  - Analyze the switching fields, which correspond to the magnetic fields at which the resistance changes abruptly. These fields provide information about the magnetic anisotropy and interlayer coupling in the $CrI_3$.
  - Repeat the measurements at different temperatures to study the temperature dependence of the TMR and the magnetic ordering.

Quantitative Data Summary

| Parameter | Typical Value Range | Significance |
|---|---|---|
| TMR Ratio | 100% - >10,000% | Device performance metric |
| Switching Field | 0.1 - 2 Tesla | Indicates magnetic anisotropy and interlayer coupling |
| Operating Temperature | < 61 K (Curie Temperature of bulk $CrI_3$) | Defines the temperature range for magnetic ordering |
| Device Resistance | kΩ - MΩ | Depends on barrier thickness and area |

# Troubleshooting and Common Failure Modes

The fabrication of vdW heterostructures is prone to various challenges that can lead to device failure.

© 2026 BenchChem. All rights reserved.

| Issue | Potential Cause(s) | Suggested Solution(s) |
|---|---|---|
| Device Short Circuit | - Incomplete etching of the heterostructure. - Metal contacts shorting the top and bottom electrodes. | - Optimize the etching process (time, power). - Ensure proper alignment during lithography. |
| No TMR Effect | - Poor quality of the $CrI_3$ crystal. - Contamination at the interfaces. - Device degradation due to air exposure. | - Use high-quality bulk crystals for exfoliation. - Perform all fabrication steps in an inert environment. - Encapsulate the device with hexagonal boron nitride (hBN). |
| Low TMR Ratio | - Incomplete magnetic switching. - Inhomogeneous $CrI_3$ thickness. - High contact resistance. | - Apply a sufficiently large magnetic field. - Characterize the flake thickness with AFM before transfer. - Optimize contact deposition and annealing. |
| Device Degradation | - $CrI_3$ is highly sensitive to air and moisture. | - Minimize air exposure during fabrication and measurement. - Encapsulate the entire device with a protective layer like hBN or $Al_2O_3$. |

# Conclusion and Future Outlook

The creation of magnetic tunnel junctions with $CrI_3$ represents a significant step towards the realization of novel spintronic devices with unprecedented performance. The protocols and insights provided in this application note offer a comprehensive guide for researchers to successfully fabricate and characterize these exciting devices. While challenges related to the air sensitivity of $CrI_3$ and the complexity of vdW heterostructure assembly remain, ongoing research into passivation techniques and automated fabrication processes promises to overcome these hurdles. The exploration of other 2D magnetic materials and their heterostructures will undoubtedly continue to fuel innovation in the field of spintronics, paving the way for a new generation of low-power, high-speed information technologies.

© 2026 BenchChem. All rights reserved.

# References


- Giant Tunneling Magnetoresistance in Spin-Filter van der Waals Heterostructures.arXiv:1801.08679. [Link]
- Transfer of van der Waals Heterostructures of Two-dimensional Materials onto Microelectromechanical Systems.Sensors and Materials, Vol. 35, No. 6 (2023). [Link]
- How to Perform Dry Exfoliation on Graphene.AZoNano. [Link]
- Transfer of 2D Films: From Imperfection to Perfection.ACS Nano 2024, 18, 14841–14876. [Link]
- Disorder in van der Waals heterostructures of 2D materials.Nature Reviews Materials 3, 299–313 (2018). [Link]
- Dry Transfer of van der Waals Junctions of Two-Dimensional Materials onto Patterned Substrates Using Plasticized Poly(vinyl chloride)/Kamaboko-Shaped Polydimethylsiloxane.ACS Applied Nano Materials 2022, 5, 1, 1129–1137. [Link]
- Chapter 4. Basic Failure Modes and Mechanisms.Component Engineering & Assurance. [Link]
- Electronic Energy Meter Based on a Tunnel Magnetoresistive Effect (TMR) Current Sensor.Sensors 2013, 13(9), 11524-11538. [Link]
- How to make PDMS film (or stamp) in the laboratory in order to use it for dry transfer of thin films (< 1 mm) (pick-up and release technique)?ResearchGate. [Link]
- High-Precision Tunneling Magnetoresistance (TMR) Current Sensor for Weak Current Measurement in Smart Grid Applications.Sensors 2023, 23(14), 6331. [Link]
- Van der Waals heterostructures.Nature 499, 419–425 (2013). [Link]
- Development of Tunnel Magneto-Resistive Sensors.IEICE TRANSACTIONS on Electronics Vol.E107-C No.6 pp.171-175. [Link]


© 2026 BenchChem. All rights reserved.

- Tunnel Magnetoresistance-Based Noncontact Current Sensing and Measurement Method.IEEE Transactions on Instrumentation and Measurement (Volume: 71). [Link]
- Dry release transfer of graphene and few-layer h-BN by utilizing thermoplasticity of polypropylene carbonate.npj 2D Materials and Applications 3, 22 (2019). [Link]
- Basic Failure Mechanisms.Semitracks. [Link]
- Tunnel magnetoresistance.Wikipedia. [Link]
- Versatile polymer method to dry-flip two-dimensional moiré hetero structures for nanoscale surface characterization.arXiv:2406.02479. [Link]
- Van der Waals heterostructures.Nature 499, 419–425 (2013). [Link]


***Need Custom Synthesis?***

*BenchChem offers custom synthesis for rare earth carbides and specific isotopiclabeling.*

*Email: info@benchchem.com or Request Quote Online.*

## Sources


- 1. allen.physics.ucsd.edu [allen.physics.ucsd.edu]
- 2. Tunnel magnetoresistance - Wikipedia [en.wikipedia.org]
- 3. researchgate.net [researchgate.net]
- 4. researchgate.net [researchgate.net]
- 5. sensors.myu-group.co.jp [sensors.myu-group.co.jp]
- 6. Versatile polymer method to dry-flip two-dimensional moiré hetero structures for nanoscale surface characterization [arxiv.org]

- To cite this document: BenchChem. [Application Notes and Protocols for Creating Magnetic Tunnel Junctions with $CrI_3$]. BenchChem, [2026]. [Online PDF]. Available at: [https://www.benchchem.com/product/b082391/docs#application-notes-and-protocols-for-creating-magnetic-tunnel-junctions-with-cri]

© 2026 BenchChem. All rights reserved.

**Disclaimer & Data Validity:**

The information provided in this document is for Research Use Only (RUO) and is strictly not intended for diagnostic or therapeutic procedures. While BenchChem strives to provide accurate protocols, we make no warranties, express or implied, regarding the fitness of this product for every specific experimental setup.

**Technical Support:**The protocols provided are for reference purposes. Unsure if this reagent suits your experiment?

**Need Industrial/Bulk Grade?** Request Custom Synthesis Quote

BenchChem

Our mission is to be the trusted global source of essential and advanced chemicals, empowering scientists and researchers to drive progress in science and industry.

Contact

Address: 3281 E Guasti Rd

Ontario, CA 91761, United States

Phone: (601) 213-4426

Email: info@benchchem.com

Contact our Ph.D. Support Team for a compatibility check

© 2026 BenchChem. All rights reserved.