Using 2-Methoxyethenylcyclopropane as a C5 building block

Author: BenchChem Technical Support Team. **Date**: April 2026

Compound of Interest

Compound Name:	*2-Methoxyethenylcyclopropane*
Cat. No.:	*B8184744*

Get Quote

Application Note: **2-Methoxyethenylcyclopropane** as a Versatile C5 Building Block

Abstract

This guide details the strategic application of **2-methoxyethenylcyclopropane** (2-MVCP) as a high-value C5 synthon in organic synthesis. Unlike unsubstituted vinylcyclopropanes, the inclusion of the methoxy group at the vinyl terminus introduces electronic asymmetry, significantly lowering activation barriers for rearrangements and providing a latent carbonyl functionality. This note covers three primary reaction manifolds: (1) Thermal/Catalytic Vinylcyclopropane-Cyclopentene (VCP-CP) rearrangement, (2) Rhodium-catalyzed [5+2] cycloadditions, and (3) Acid-mediated ring-opening to 1,4-dicarbonyl systems.

Introduction: The "Spring-Loaded" C5 Synthon

2-Methoxyethenylcyclopropane combines the high ring strain of cyclopropane (~27.5 kcal/mol) with the reactivity of an electron-rich enol ether. It serves as a "spring-loaded" C5 building block, capable of releasing strain energy to drive the formation of complex five- and seven-membered rings.

Key Advantages:

© 2026 BenchChem. All rights reserved.

- Electronic Activation: The methoxy group stabilizes positive charge buildup during ring-opening, accelerating reaction rates compared to naked vinylcyclopropanes.
- Latent Functionality: The enol ether product is a masked aldehyde/ketone, allowing for immediate downstream functionalization (e.g., hydrolysis to 1,4-dicarbonyls).
- Stereochemical Relay: The stereochemistry of the cyclopropane ring can be transferred to the product ring system with high fidelity.

Reaction Manifolds & Decision Matrix

The reactivity of 2-MVCP is divergent, controlled by the catalyst and conditions applied.

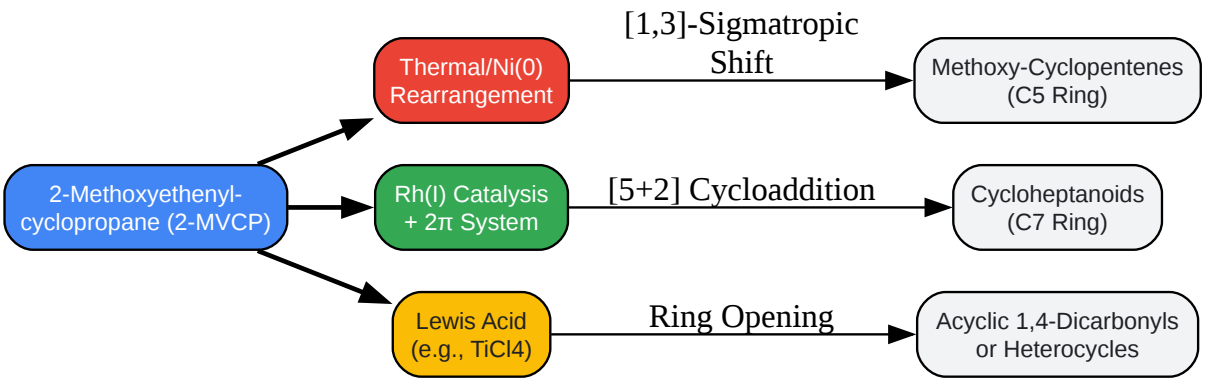

Click to download full resolution via product page

Figure 1: Divergent reactivity pathways of 2-MVCP controlled by catalytic environment.

Application 1: Vinylcyclopropane-Cyclopentene (VCP-CP) Rearrangement

The VCP-CP rearrangement is a classic method for constructing cyclopentenes.[1] The presence of the 2-methoxy group allows this reaction to proceed under milder conditions than the standard >400°C required for unsubstituted systems.

Mechanism & Causality

© 2026 BenchChem. All rights reserved.

The reaction proceeds via a biradical or concerted [1,3]-sigmatropic shift.[2] The methoxy substituent stabilizes the transition state (and the resulting radical/zwitterion), lowering the activation energy (Ea).

- Thermal: Requires ~200-250°C (Flash Vacuum Pyrolysis).
- Catalytic (Ni(0)/NHC): Proceeds at ambient temperatures (Room Temp to 60°C).

Protocol: Ni(0)-Catalyzed Rearrangement

Target: Synthesis of 3-methoxycyclopent-1-ene (precursor to cyclopentenone).

Reagents:

- Substrate: **2-Methoxyethenylcyclopropane** (1.0 equiv)
- Catalyst: $Ni(COD)_2$ (10 mol%)
- Ligand: IPr (1,3-bis(2,6-diisopropylphenyl)imidazol-2-ylidene) (10 mol%)
- Solvent: Toluene (anhydrous, degassed)

Step-by-Step Procedure:

- Glovebox Operation: In a nitrogen-filled glovebox, weigh $Ni(COD)_2$ (27.5 mg, 0.1 mmol) and IPr ligand (38.8 mg, 0.1 mmol) into a screw-cap vial.
- Catalyst Formation: Add 2 mL of anhydrous toluene. Stir for 15 minutes until the solution turns dark brown/black, indicating active catalyst formation.
- Substrate Addition: Dissolve 2-MVCP (1.0 mmol) in 1 mL toluene and add dropwise to the catalyst mixture.
- Reaction: Seal the vial and stir at 60°C for 4-12 hours. Monitor consumption by TLC (stain with $KMnO_4$; VCPs stain rapidly).
- Workup: Filter the mixture through a short pad of silica gel (eluting with Et_2O) to remove metal residues.

© 2026 BenchChem. All rights reserved.

- Purification: Concentrate in vacuo. Purify via flash column chromatography (Hexanes/EtOAc). Note: The product is an enol ether; avoid acidic silica or add 1% Et_3N to the eluent to prevent hydrolysis.

Data Interpretation:

- ^1H NMR: Look for the disappearance of cyclopropyl protons (0.5–1.0 ppm) and the appearance of cyclopentene olefinic protons (5.5–6.0 ppm).

Application 2: Rhodium-Catalyzed [5+2] Cycloaddition

This is the most powerful application of 2-MVCP, utilizing it as a C5 homologating agent to synthesize seven-membered rings (cycloheptenes), a core motif in terpenes (e.g., ingenol).

Mechanism

The reaction follows the Wender [5+2] mechanism:

- Cleavage: Rh(I) inserts into the cyclopropane bond (strain-driven).
- Insertion: The 2π partner (alkyne/alkene) inserts into the metallacycle.
- Reductive Elimination: Formation of the C7 ring.

© 2026 BenchChem. All rights reserved.

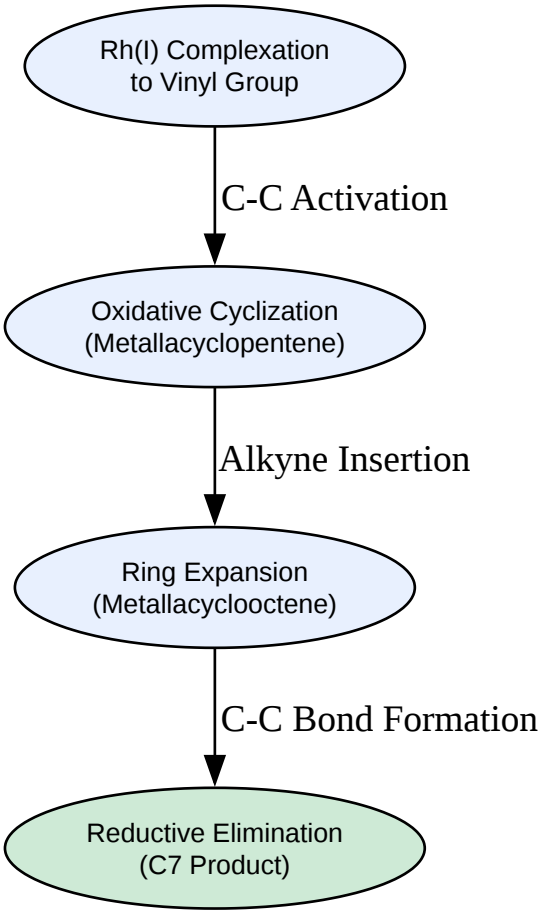

Click to download full resolution via product page

Figure 2: Simplified catalytic cycle for Rh-mediated [5+2] cycloaddition.

Protocol: [5+2] Cycloaddition with Dimethyl Acetylenedicarboxylate (DMAD)

Reagents:

- Substrate: 2-MVCP (1.0 equiv)
- Alkyne: DMAD (1.2 equiv)
- Catalyst: $[Rh(CO)_2Cl]_2$ (5 mol%)
- Solvent: 1,2-Dichloroethane (DCE)

© 2026 BenchChem. All rights reserved.

Step-by-Step Procedure:

- Preparation: Flame-dry a round-bottom flask and cool under Argon.
- Solvation: Add 2-MVCP (1.0 mmol) and DMAD (1.2 mmol) in DCE (0.1 M concentration).
- Catalyst Addition: Add $[Rh(CO)_2Cl]_2$ (19 mg, 0.05 mmol).
- Reaction: Heat to 80°C. The reaction typically completes within 2–6 hours.
- Validation: Monitor by TLC. The product will be less polar than the starting material.
- Purification: Concentrate and purify via silica gel chromatography.

Critical Note: The methoxy group often directs regioselectivity. In the resulting cycloheptadiene, the methoxy group usually ends up at the C1 or C5 position depending on the specific substitution pattern of the starting VCP.

Comparative Data: Thermal vs. Catalytic

Feature	Thermal Rearrangement	Ni(0) Catalysis	Rh(I) [5+2] Cycloaddition
Temp	>250°C (FVP)	25–60°C	60–80°C
Product	Cyclopentene	Cyclopentene	Cycloheptadiene
Yield	40–60% (variable)	80–95%	75–90%
Stereospecificity	Low (Radical scrambling)	High (Concerted)	High
Mechanism	Diradical/Sigmatropic	Oxidative Addition	Metallacycle Insertion

References

- Wender, P. A., et al. "Transition Metal-Catalyzed [5+2] Cycloadditions of Vinylcyclopropanes and Alkynes: A New Strategy for the Synthesis of Seven-Membered Rings."[3] Journal of the American Chemical Society, vol. 117, no. 16, 1995, pp. 4720–4721. Link

© 2026 BenchChem. All rights reserved.

- Zuo, G., & Louie, J. "Selectivity in Nickel-Catalyzed Rearrangements of Cyclopropylen-ynes." Journal of the American Chemical Society, vol. 127, no. 16, 2005, pp. 5798–5799. Link
- Baldwin, J. E. "Thermal Rearrangements of Vinylcyclopropanes to Cyclopentenes." Chemical Reviews, vol. 103, no. 4, 2003, pp. 1197–1212. Link
- Yu, Z.-X., et al. "Rh(I)-Catalyzed Two-Component [5+2+1] Cycloaddition of Ene-Vinylcyclopropanes and CO."[3] Journal of the American Chemical Society, vol. 129, no. 27, 2007, pp. 8436–8437. Link
- Trost, B. M., et al. "Ruthenium-Catalyzed Reactions of Vinylcyclopropanes: An Enantioselective Approach to Cyclopentanes." Angewandte Chemie International Edition, vol. 41, no. 18, 2002, pp. 3492–3495. Link

Need Custom Synthesis?

BenchChem offers custom synthesis for rare earth carbides and specific isotopiclabeling.

Email: info@benchchem.com or Request Quote Online.

Sources

- 1. Vinylcyclopropane rearrangement - Wikipedia [en.wikipedia.org]
- 2. pubs.acs.org [pubs.acs.org]
- 3. chem.pku.edu.cn [chem.pku.edu.cn]
- To cite this document: BenchChem. [Using 2-Methoxyethenylcyclopropane as a C5 building block]. BenchChem, [2026]. [Online PDF]. Available at: [https://www.benchchem.com/product/b8184744/docs#using-2-methoxyethenylcyclopropane-as-a-c5-building-block]

Disclaimer & Data Validity:

The information provided in this document is for Research Use Only (RUO) and is strictly not intended for diagnostic or therapeutic procedures. While BenchChem strives to provide accurate protocols, we make no warranties, express or implied, regarding the fitness of this product for every specific experimental setup.

© 2026 BenchChem. All rights reserved.

Technical Support: The protocols provided are for reference purposes. Unsure if this reagent suits your experiment?

Need Industrial/Bulk Grade? Request Custom Synthesis Quote

BenchChem

Our mission is to be the trusted global source of essential and advanced chemicals, empowering scientists and researchers to drive progress in science and industry.

Contact

Address: 3281 E Guasti Rd

Ontario, CA 91761, United States

Phone: (601) 213-4426

Email: info@benchchem.com

Contact our Ph.D. Support Team for a compatibility check

© 2026 BenchChem. All rights reserved.