# Unveiling Cellular Heterogeneity: A Guide to Single-Cell Proteomics

**Author**: BenchChem Technical Support Team. **Date**: April 2026

***Compound of Interest***

*Compound Name:* *Scpa*

*Cat. No.:* *B8117685*

*Get Quote*

For researchers, scientists, and drug development professionals, understanding the intricate workings of individual cells is paramount. Single-cell proteomics (SCP) has emerged as a powerful technology, moving beyond the averaged measurements of bulk analysis to reveal the proteomic landscape of individual cells. This guide provides a comprehensive comparison of mass spectrometry-based SCP with alternative methods, supported by experimental data and detailed protocols, to aid in the selection and implementation of the most suitable approach for your research needs.

Single-cell proteomics offers a granular view of cellular function, dissecting the heterogeneity within cell populations that is often obscured in traditional bulk proteomics.[1][2] This capability is crucial for identifying rare cell types, understanding complex disease mechanisms, and elucidating signaling pathways with unprecedented detail.[1][3] Mass spectrometry (MS)-based SCP methods, in particular, provide an untargeted and comprehensive analysis of the whole proteome.[4]

## Performance Comparison: Single-Cell Proteomics vs. Alternative Methods

The choice of a protein analysis method depends on the specific research question, balancing factors like proteome coverage, throughput, sensitivity, and the number of cells that can be analyzed. Below is a comparative overview of MS-based SCP with bulk proteomics, flow cytometry, and single-cell RNA sequencing.

© 2026 BenchChem. All rights reserved.

| Parameter | Mass Spectrometry-Based Single-Cell Proteomics (e.g., plexDIA, SCoPE2, nanoPOTS) | Bulk Proteomics (Mass Spectrometry) | Flow Cytometry / Mass Cytometry (CyTOF) | Single-Cell RNA Sequencing (scRNA-seq) |
|---|---|---|---|---|
| Analyte | Proteins | Proteins (averaged from a cell population) | Proteins (typically cell surface or intracellular with fixation) | mRNA transcripts |
| Proteome/Transcriptome Coverage | 1,000 - 8,000+ proteins per cell[2][5] | High (deep proteome coverage) | Low to Medium (tens to ~50 proteins)[6] | High (whole transcriptome) |
| Throughput (Cells/Day) | ~100s to >1,000s[1][7] | Not applicable (bulk sample) | High (thousands of cells per second)[8] | High (thousands of cells) |
| Quantitative Accuracy | High, benchmarked with mixed species proteomes[3][9] | High | Semi-quantitative to quantitative | Quantitative |
| Sensitivity | High, capable of detecting proteins in single mammalian cells[10] | High | High for targeted proteins | High |
| Key Advantage | Unveils cellular heterogeneity and protein covariation at a | Deep proteome coverage from a population average | High-throughput analysis of pre-defined protein markers | Genome-wide transcriptomic profiling at the single-cell level |

© 2026 BenchChem. All rights reserved.

| | | | | |
|---|---|---|---|---|
| | proteome-wide level[3] | | | |
| Key Limitation | Technically demanding, potential for sample loss, complex data analysis[5] | Masks cellular heterogeneity[2] | Limited by the availability of specific antibodies | mRNA levels do not always correlate with protein abundance[11] |

## Elucidating Signaling Pathways: The EGF-Receptor-Mediated PI3K Pathway in Glioblastoma

A significant application of single-cell proteomics is the detailed analysis of signaling pathways within individual cells, revealing heterogeneity in response to stimuli or therapeutic agents. One study utilized a single-cell proteomic chip to quantify a dozen proteins in the EGF-receptor-mediated PI3K signaling pathway in glioblastoma multiforme (GBM) cells.[12] This approach allowed for the assessment of protein-protein interactions and the effects of EGF stimulation and erlotinib inhibition at the single-cell level.[12]

© 2026 BenchChem. All rights reserved.

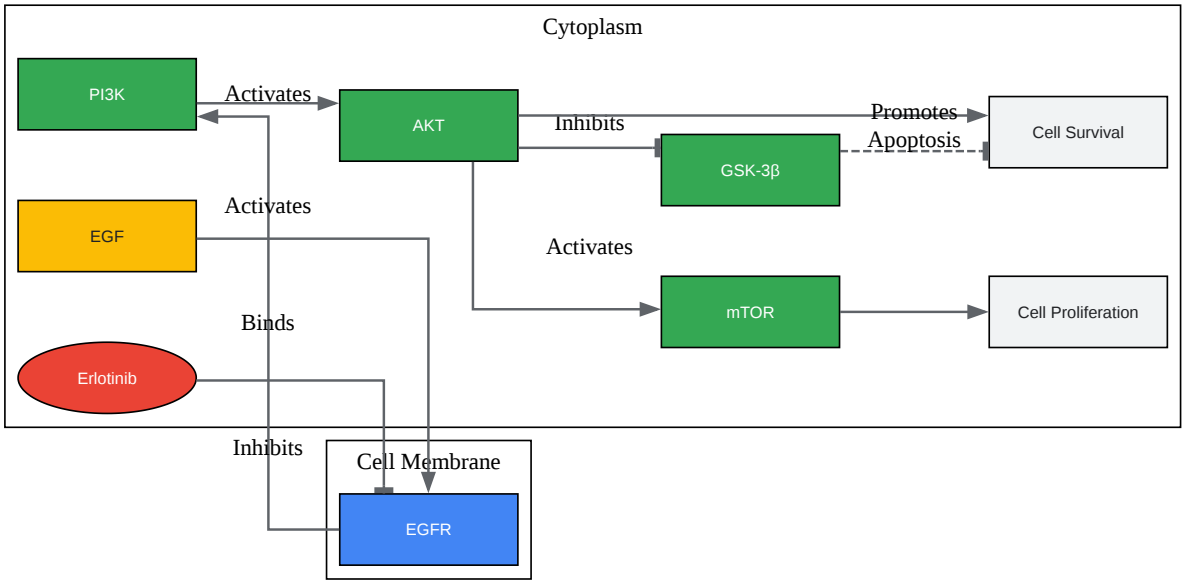
Cytoplasm
PI3K
Activates
AKT
Inhibits
Promotes
Apoptosis
Cell Survival
GSK-3β
EGF
Activates
Activates
mTOR
Cell Proliferation
Binds
Erlotinib
Inhibits
Cell Membrane
EGFR

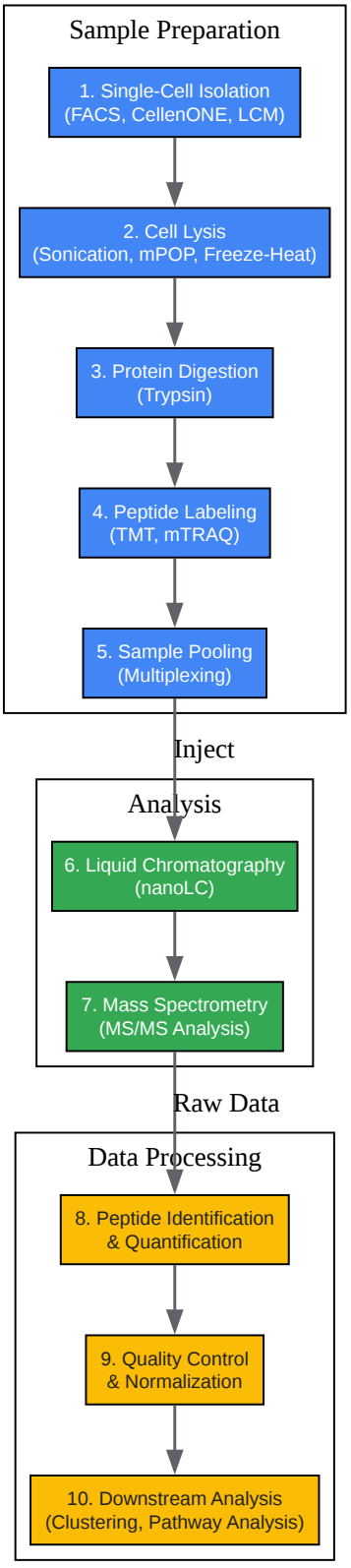


Click to download full resolution via product page

© 2026 BenchChem. All rights reserved.

***Need Custom Synthesis?***

*BenchChem offers custom synthesis for rare earth carbides and specific isotopiclabeling.*

*Email: info@benchchem.com or Request Quote Online.*

# References

- 1. m.youtube.com [m.youtube.com]
- 2. Increasing the throughput of sensitive proteomics by plexDIA - PMC [pmc.ncbi.nlm.nih.gov]
- 3. Initial recommendations for performing, benchmarking and reporting single-cell proteomics experiments - PMC [pmc.ncbi.nlm.nih.gov]
- 4. Single Cell Proteomics data processing and analysis • scp [uclouvain-cbio.github.io]
- 5. m.youtube.com [m.youtube.com]
- 6. Frontiers | Performance of spectral flow cytometry and mass cytometry for the study of innate myeloid cell populations [frontiersin.org]
- 7. biocompare.com [biocompare.com]
- 8. xaltnav.com [xaltnav.com]
- 9. pubs.acs.org [pubs.acs.org]
- 10. Quantitative Accuracy and Precision in Multiplexed Single-Cell Proteomics - PMC [pmc.ncbi.nlm.nih.gov]
- 11. insideenergyandenvironment.com [insideenergyandenvironment.com]
- 12. pnas.org [pnas.org]
- To cite this document: BenchChem. [Unveiling Cellular Heterogeneity: A Guide to Single-Cell Proteomics]. BenchChem, [2026]. [Online PDF]. Available at: [https://www.benchchem.com/product/b8117685/docs#unveiling-cellular-heterogeneity-a-guide-to-single-cell-proteomics]

---

**Disclaimer & Data Validity:**

The information provided in this document is for Research Use Only (RUO) and is strictly not intended for diagnostic or therapeutic procedures. While BenchChem strives to provide

© 2026 BenchChem. All rights reserved.

accurate protocols, we make no warranties, express or implied, regarding the fitness of this product for every specific experimental setup.

**Technical Support:**The protocols provided are for reference purposes. Unsure if this reagent suits your experiment?

**Need Industrial/Bulk Grade?** Request Custom Synthesis Quote

# BenchChem

Our mission is to be the trusted global source of essential and advanced chemicals, empowering scientists and researchers to drive progress in science and industry.

Contact

Address: 3281 E Guasti Rd

Ontario, CA 91761, United States

Phone: (601) 213-4426

Email: info@benchchem.com

Contact our Ph.D. Support Team for a compatibility check

© 2026 BenchChem. All rights reserved.