Copper-Free vs. Copper-Catalyzed Click Chemistry: A Comparative Guide for Researchers

Author: BenchChem Technical Support Team. **Date**: April 2026

Compound of Interest

Compound Name: *Gly-Gly-Gly-PEG4-DBCO*

Cat. No.: *B8104345*

Get Quote

In the realm of bioconjugation and drug development, the ability to specifically and efficiently link molecules is paramount. "Click chemistry," a concept introduced by K.B. Sharpless, has revolutionized this field by providing a set of powerful, reliable, and modular reactions.[1] The cornerstone of this chemical toolbox has traditionally been the Copper-Catalyzed Azide-Alkyne Cycloaddition (CuAAC).[1][2] However, the inherent cytotoxicity of the copper catalyst has spurred the development of a powerful alternative: Copper-Free Click Chemistry, most notably the Strain-Promoted Azide-Alkyne Cycloaddition (SPAAC).[1][3] This guide provides a detailed comparison of these two methodologies, offering researchers, scientists, and drug development professionals the insights needed to select the optimal approach for their specific applications.

Core Advantages of Copper-Free Click Chemistry

The primary driver for the adoption of copper-free methods is the elimination of the cytotoxic copper catalyst.[1][4] This fundamental difference confers several significant advantages, particularly in biological applications.

© 2026 BenchChem. All rights reserved.

- Enhanced Biocompatibility: The absence of copper makes SPAAC highly suitable for experiments involving living cells and in vivo studies, where cellular health and viability are critical.[1][4][5] Copper ions can be toxic to cells and interfere with biological processes, a significant drawback of the CuAAC reaction in sensitive biological systems.[1]

- Simplified Purification: By forgoing the copper catalyst, downstream purification steps are streamlined.[3] There is no need to remove residual copper from the final product, which can be a challenging and time-consuming process, especially when working with sensitive biomolecules.[3]

- Suitability for In Vivo Applications: The bioorthogonal nature of the strained alkynes and azides used in SPAAC, coupled with the lack of a toxic catalyst, makes it an ideal choice for labeling and tracking molecules within living organisms.[4][6]

Performance Comparison: A Quantitative Look

While the biocompatibility of SPAAC is a major advantage, the reaction kinetics and yields are also critical factors for researchers. The following table summarizes the key performance differences between CuAAC and SPAAC.

© 2026 BenchChem. All rights reserved.

Feature	Copper-Catalyzed (CuAAC)	Copper-Free (SPAAC)	References
Catalyst	Copper(I)	None (Strain-promoted)	[1][3]
Biocompatibility	Lower (due to copper cytotoxicity)	Higher	[1][4][5]
Reaction Rate	Generally faster	Can be slower, but newer strained alkynes show comparable rates	[1][7][8]
Second-Order Rate Constant	~10 $M^{-1}s^{-1}$ (with 20 µM Cu(I))	~0.1 $M^{-1}s^{-1}$ (can be improved with optimized cyclooctynes)	[7]
Specificity	High	High	[1][9]
Regioselectivity	Exclusively 1,4-disubstituted triazole	Mixture of regioisomers	[6][10]
Purification	Requires removal of copper	Simplified, no metal removal needed	[3]
Reagent Synthesis	Terminal alkynes are readily available	Synthesis of strained cyclooctynes can be complex and costly	[1]

Reaction Mechanisms and Experimental Workflows

The fundamental difference in the reaction mechanism dictates the experimental setup for each method.

Copper-Catalyzed Azide-Alkyne Cycloaddition (CuAAC)

The CuAAC reaction involves the in-situ formation of a copper(I) acetylide intermediate, which then reacts with an azide to form the triazole product.[1] This reaction is highly regioselective, yielding exclusively the 1,4-disubstituted triazole.[10]

© 2026 BenchChem. All rights reserved.

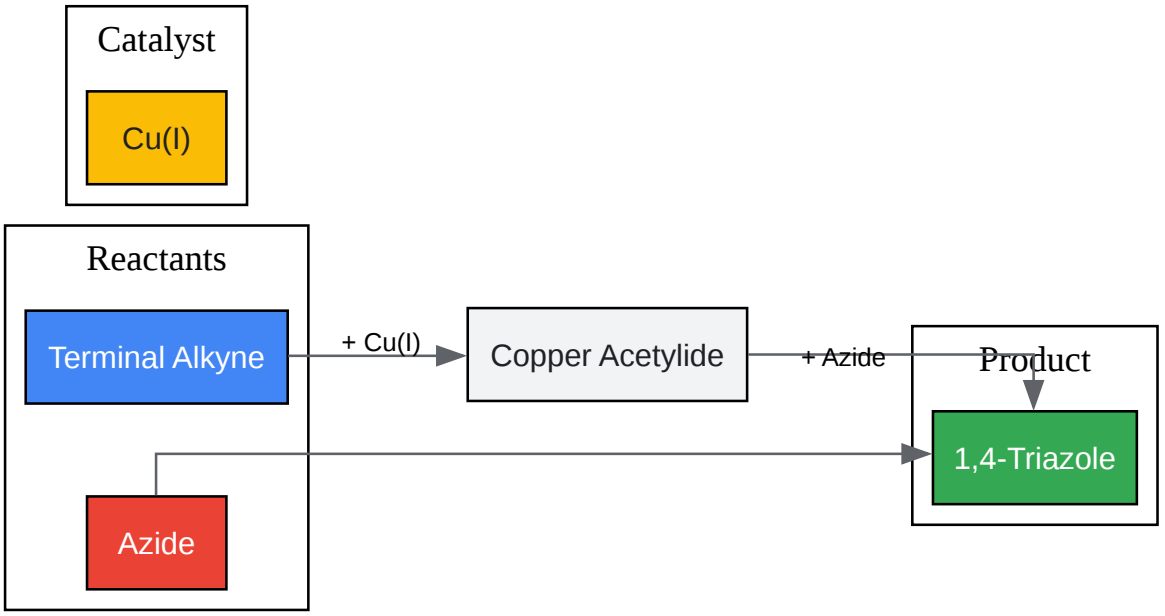

Click to download full resolution via product page

Caption: Mechanism of Copper-Catalyzed Azide-Alkyne Cycloaddition (CuAAC).

Strain-Promoted Azide-Alkyne Cycloaddition (SPAAC)

SPAAC is a concerted [3+2] cycloaddition reaction driven by the release of ring strain from a cyclooctyne.[1] This reaction does not require a catalyst and proceeds readily at physiological temperatures.[1]

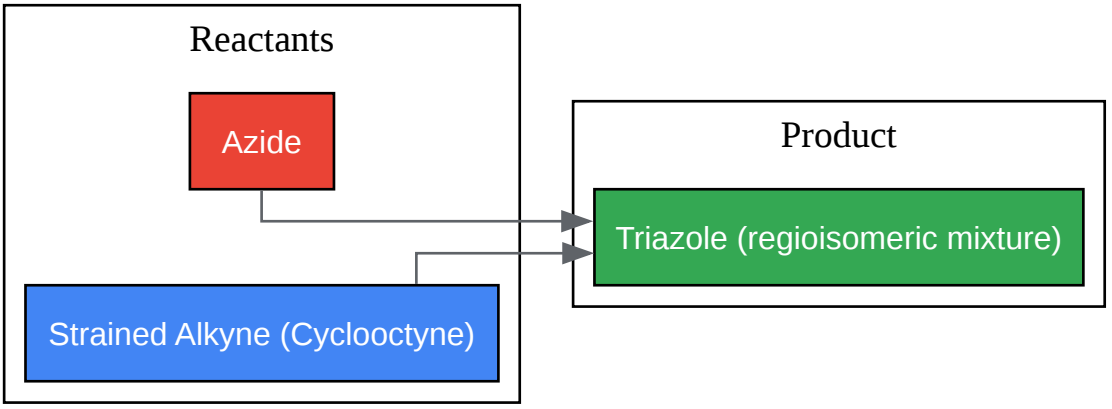

Click to download full resolution via product page

Caption: Mechanism of Strain-Promoted Azide-Alkyne Cycloaddition (SPAAC).

Comparative Experimental Workflow

The following diagram illustrates a generalized workflow for a bioconjugation experiment using both CuAAC and SPAAC, highlighting the key differences.

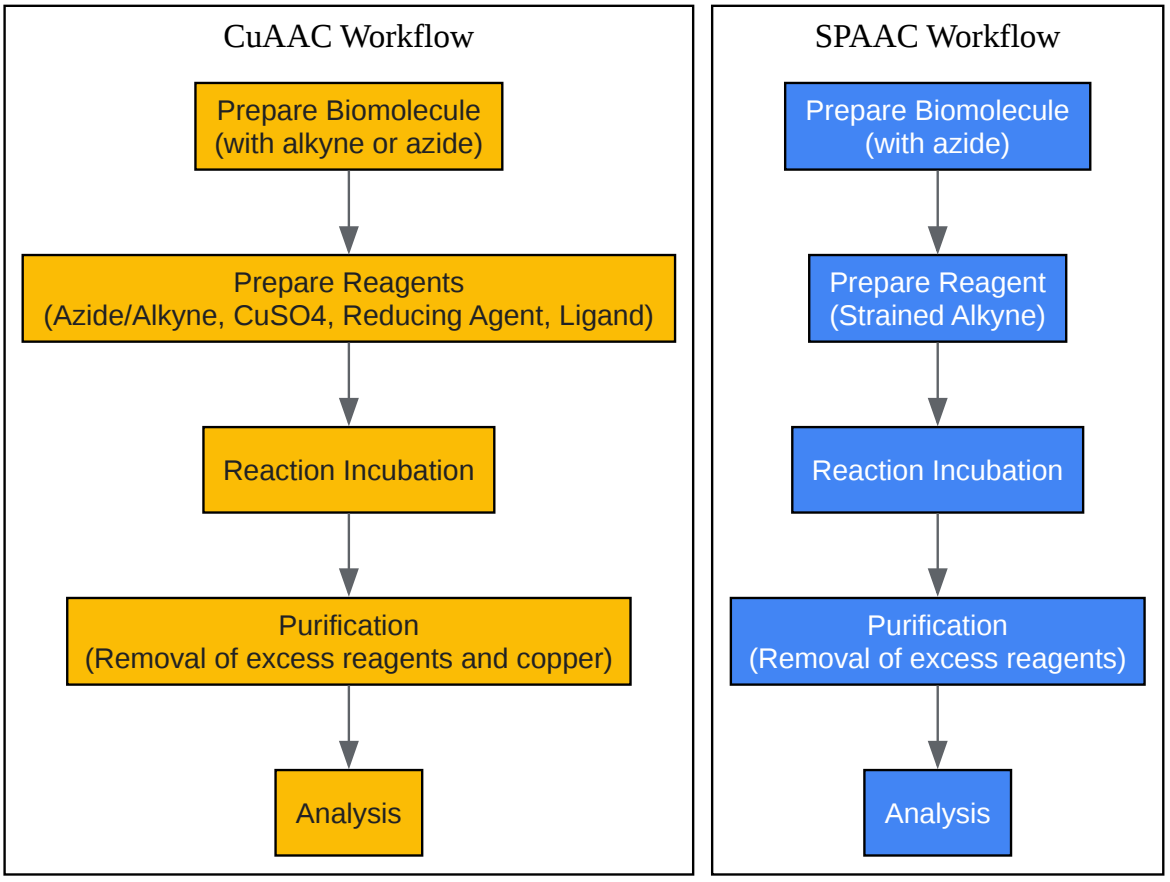

Click to download full resolution via product page

Caption: Comparative experimental workflow for CuAAC and SPAAC.

Detailed Experimental Protocols

The following are generalized protocols for performing CuAAC and SPAAC reactions for protein labeling. Researchers should optimize these protocols for their specific biomolecules and

© 2026 BenchChem. All rights reserved.

reagents.

Protocol 1: Copper-Catalyzed Azide-Alkyne Cycloaddition (CuAAC) for Protein Labeling

Materials:

- Alkyne-modified protein in a suitable buffer (e.g., PBS)
- Azide-containing label (e.g., fluorescent dye)
- Copper(II) sulfate ($CuSO_4$) stock solution (e.g., 100 mM in water)
- Reducing agent: Sodium ascorbate stock solution (e.g., 100 mM in water, freshly prepared)
- Copper-chelating ligand: THPTA (tris(3-hydroxypropyltriazolylmethyl)amine) or TBTA (tris((1-benzyl-1H-1,2,3-triazol-4-yl)methyl)amine) stock solution (e.g., 200 mM in water or DMSO) [11][12]
- DMSO or DMF for dissolving hydrophobic labels[11]

Procedure:

- Preparation of Reagents:
  - Dissolve the azide-labeled drug/probe in DMSO or an appropriate buffer.[11]
  - Prepare fresh sodium ascorbate solution.[11]
- Reaction Setup:
  - In a reaction tube, combine the alkyne-modified protein with the azide-containing label. The molar ratio of label to protein is typically between 4:1 and 10:1.[11]
  - Add the copper ligand (e.g., THPTA) to the reaction mixture.[11]
  - Add the $CuSO_4$ solution. The final copper concentration is typically in the low millimolar range.[11][12]

© 2026 BenchChem. All rights reserved.

- Initiation and Incubation:
  - Initiate the reaction by adding the freshly prepared sodium ascorbate solution.[11]
  - Gently mix the reaction and incubate at room temperature for 30-60 minutes, protecting it from light.[11]
- Purification:
  - Remove unreacted reagents and the copper catalyst using size-exclusion chromatography, dialysis, or affinity purification.[11]
- Analysis:
  - Analyze the final conjugate for labeling efficiency, purity, and drug-to-antibody ratio (DAR) if applicable.[11]

Protocol 2: Strain-Promoted Azide-Alkyne Cycloaddition (SPAAC) for Protein Labeling

Materials:

- Azide-modified protein in an amine-free buffer (1-10 mg/mL)[13]
- DBCO (dibenzocyclooctyne)-functionalized label (e.g., fluorescent dye)
- DMSO for dissolving the DBCO reagent[13]

Procedure:

- Preparation of Reagents:
  - Prepare a stock solution of the DBCO-functionalized label in DMSO (e.g., 10 mM).[13]
- Reaction Setup:
  - To the azide-modified protein solution, add a 1.5 to 5-fold molar excess of the DBCO-label solution.[13][14]

© 2026 BenchChem. All rights reserved.

- Ensure the final concentration of the organic solvent (e.g., DMSO) is kept below 10% to avoid protein denaturation.[13][14]

- Incubation:
  - Incubate the reaction mixture at room temperature for 1-2 hours or at 4°C overnight with gentle mixing.[13]

- Purification:
  - Remove the unreacted DBCO reagent by size-exclusion chromatography (e.g., a desalting column) or dialysis against a suitable buffer.[13]

- Analysis:
  - Confirm the conjugation and determine the degree of labeling using techniques such as SDS-PAGE with fluorescence imaging (if a fluorescent dye was used) and mass spectrometry.[13]

Conclusion

Both copper-catalyzed and copper-free click chemistry are powerful tools for bioconjugation. The choice between them depends heavily on the specific application. For in vitro applications where speed is paramount and the biomolecules are robust, CuAAC remains a highly effective method. However, for applications involving live cells, in vivo studies, or sensitive biological systems, the biocompatibility and simplified workflow of copper-free click chemistry, particularly SPAAC, offer clear and compelling advantages. As the development of new strained alkynes continues to improve the kinetics of SPAAC, its utility and adoption in drug discovery and biomedical research are poised to expand even further.

Need Custom Synthesis?

BenchChem offers custom synthesis for rare earth carbides and specific isotopiclabeling.

Email: info@benchchem.com or Request Quote Online.

References

- 1. chempep.com [chempep.com]
- 2. Click Chemistry [organic-chemistry.org]
- 3. benchchem.com [benchchem.com]
- 4. pharmiweb.com [pharmiweb.com]
- 5. Activated DBCO PEG for Copper Free Click Chemistry | Biopharma PEG [biochempeg.com]
- 6. Copper-free click chemistry - Wikipedia [en.wikipedia.org]
- 7. Biomedical applications of copper-free click chemistry: in vitro, in vivo, and ex vivo - PMC [pmc.ncbi.nlm.nih.gov]
- 8. pubs.acs.org [pubs.acs.org]
- 9. Modification of Protein Scaffolds via Copper-Catalyzed Azide–Alkyne Cycloaddition | Springer Nature Experiments [experiments.springernature.com]
- 10. benchchem.com [benchchem.com]
- 11. axispharm.com [axispharm.com]
- 12. broadpharm.com [broadpharm.com]
- 13. benchchem.com [benchchem.com]
- 14. benchchem.com [benchchem.com]

- To cite this document: BenchChem. [Copper-Free vs. Copper-Catalyzed Click Chemistry: A Comparative Guide for Researchers]. BenchChem, [2026]. [Online PDF]. Available at: [https://www.benchchem.com/product/b8104345/docs#copper-free-vs-copper-catalyzed-click-chemistry-a-comparative-guide-for-researchers]

Disclaimer & Data Validity:

The information provided in this document is for Research Use Only (RUO) and is strictly not intended for diagnostic or therapeutic procedures. While BenchChem strives to provide accurate protocols, we make no warranties, express or implied, regarding the fitness of this product for every specific experimental setup.

Technical Support: The protocols provided are for reference purposes. Unsure if this reagent suits your experiment?

Need Industrial/Bulk Grade? Request Custom Synthesis Quote

© 2026 BenchChem. All rights reserved.

BenchChem

Our mission is to be the trusted global source of essential and advanced chemicals, empowering scientists and researchers to drive progress in science and industry.

Contact

Address: 3281 E Guasti Rd

Ontario, CA 91761, United States

Phone: (601) 213-4426

Email: info@benchchem.com

Contact our Ph.D. Support Team for a compatibility check

© 2026 BenchChem. All rights reserved.