An In-depth Technical Guide to the Chemical Properties of Methyl Phenyl Disulfide

Author: BenchChem Technical Support Team. **Date**: May 2026

Compound of Interest

Compound Name:	*Methyl phenyl disulfide*
CAS No.:	*14173-25-2*
Cat. No.:	*B081605*

Get Quote

Introduction

Methyl phenyl disulfide, with the chemical formula C7H8S2, is an organosulfur compound that holds significant interest for researchers and professionals in drug development and various chemical industries.[1] This unsymmetrical disulfide, featuring both a methyl and a phenyl group attached to the sulfur-sulfur linkage, presents a unique combination of reactivity and structural characteristics.[2] Its distinct chemical behavior makes it a valuable tool in synthetic organic chemistry and a subject of study for its potential biological activities.[3] This guide provides a comprehensive overview of the core chemical properties of **methyl phenyl disulfide**, offering insights into its structure, reactivity, and analytical characterization, tailored for a scientific audience.

I. Molecular Structure and Physical Properties

Methyl phenyl disulfide, also known by its IUPAC name (methyldisulfanyl)benzene, is a pale yellow liquid with a characteristic powerful, pungent odor.[1][4] The molecule's structure is defined by the C-S-S-C dihedral angle, which is typically around 90° in organic disulfides.[5] This non-planar arrangement is a key determinant of its chemical and physical behavior.

© 2026 BenchChem. All rights reserved.

Key Physical and Chemical Properties:

Property	Value	Source
Molecular Formula	C7H8S2	[1]
Molecular Weight	156.3 g/mol	[1]
Boiling Point	62.00 to 65.00 °C @ 2.00 mm Hg	[1]
Density	1.145-1.150 g/cm³	[1]
Refractive Index	1.610-1.619	[1]
Solubility	Insoluble in water; soluble in alcohol	[1]

These properties are crucial for designing experimental setups, particularly for reactions and purification processes. The compound's limited water solubility and miscibility with organic solvents like alcohol are important considerations for reaction media selection.

II. Synthesis of **Methyl Phenyl Disulfide**

The synthesis of unsymmetrical disulfides like **methyl phenyl disulfide** requires carefully controlled conditions to avoid the formation of symmetrical disulfide byproducts. A common and effective approach involves the cross-dehydrogenation of thiols.[6]

Experimental Protocol: Synthesis via Oxidative Cross-Coupling

This protocol describes a general method for the synthesis of unsymmetrical disulfides, which can be adapted for **methyl phenyl disulfide**.

Objective: To synthesize **methyl phenyl disulfide** from thiophenol and methanethiol (or a suitable precursor) via oxidative cross-coupling.

Materials:

- Thiophenol

© 2026 BenchChem. All rights reserved.

- Methanethiol (or S-methyl isothiourea sulfate as a stable precursor)
- Oxidizing agent (e.g., hydrogen peroxide, iodine)[6][7]
- Base catalyst (e.g., K2CO3 or Cs2CO3)[8]
- Solvent (e.g., ethanol/water mixture)[6]
- Standard laboratory glassware and stirring equipment
- Purification apparatus (e.g., column chromatography)

Procedure:

- Reaction Setup: In a round-bottom flask equipped with a magnetic stirrer, dissolve thiophenol in the chosen solvent system.
- Addition of Base and Thiol Precursor: Add the base catalyst to the solution, followed by the methanethiol precursor. The base facilitates the formation of the thiolate anion, the reactive species in the coupling reaction.
- Controlled Oxidation: Slowly add the oxidizing agent to the reaction mixture at a controlled temperature (often room temperature or below) to promote the cross-coupling reaction. The choice of oxidant is critical to minimize over-oxidation to sulfoxides or sulfones.[7]
- Reaction Monitoring: Monitor the progress of the reaction using Thin Layer Chromatography (TLC) or Gas Chromatography-Mass Spectrometry (GC-MS) to determine the consumption of starting materials and the formation of the desired product.
- Work-up and Purification: Once the reaction is complete, quench any remaining oxidizing agent. Extract the product into an organic solvent, wash with brine, and dry over an anhydrous salt (e.g., MgSO4). The crude product is then purified by column chromatography to isolate the **methyl phenyl disulfide**.

Causality Behind Experimental Choices:

- The use of a base is crucial to deprotonate the thiols, forming the more nucleophilic thiolate anions, which are the active participants in the disulfide bond formation.

© 2026 BenchChem. All rights reserved.

- A gradual addition of the oxidant helps to control the reaction rate and selectivity, favoring the formation of the unsymmetrical disulfide over the symmetrical ones.
- The choice of solvent can influence the reaction rate and solubility of the reactants and products.

Visualization of the Synthetic Pathway

© 2026 BenchChem. All rights reserved.

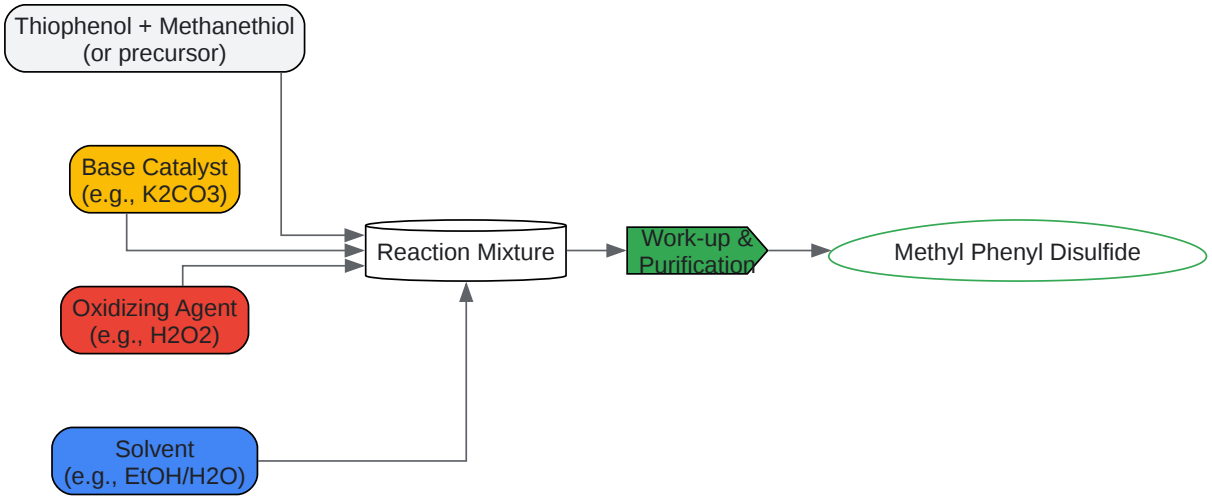

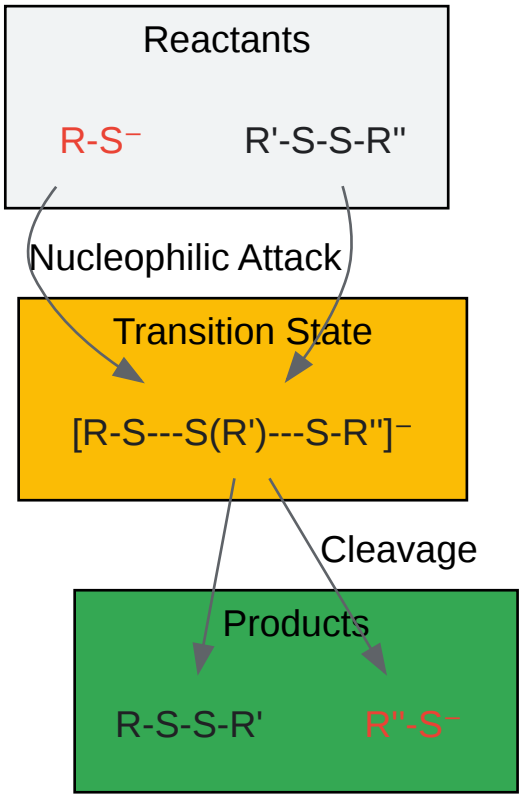

Click to download full resolution via product page

© 2026 BenchChem. All rights reserved.

Caption: Mechanism of thiol-disulfide exchange.

Reduction Reactions

Methyl phenyl disulfide can be reduced to its constituent thiols, thiophenol and methanethiol. [3]This is a common transformation for disulfides.

Protocol: Reduction with Sodium Borohydride

Objective: To reduce **methyl phenyl disulfide** to thiophenol and methanethiol.

Materials:

- **Methyl phenyl disulfide**
- Sodium borohydride (NaBH4)
- Solvent (e.g., ethanol)
- Acid for work-up (e.g., dilute HCl)
- Standard laboratory glassware

Procedure:

- Dissolve **methyl phenyl disulfide** in ethanol in a round-bottom flask.
- Cool the solution in an ice bath.
- Slowly add sodium borohydride in portions. The reaction is typically exothermic.
- Stir the reaction mixture until the disulfide is consumed (monitor by TLC).
- Carefully quench the excess NaBH4 by the slow addition of dilute HCl until the solution is acidic.
- Extract the thiols with an organic solvent.

Oxidation Reactions

© 2026 BenchChem. All rights reserved.

Oxidation of **methyl phenyl disulfide** can lead to a variety of products, including thiosulfinates and ultimately sulfonic acids, depending on the strength of the oxidizing agent and the reaction conditions. [3][9]For instance, oxidation with hydrogen peroxide can yield the corresponding sulfoxide. [3]

IV. Spectroscopic Characterization

The structure of **methyl phenyl disulfide** can be unequivocally confirmed through various spectroscopic techniques.

Spectroscopic Data Summary:

Technique	Key Features	Source
^{1}H NMR	Signals corresponding to the methyl protons and the aromatic protons of the phenyl group can be observed.	[1]
^{13}C NMR	Resonances for the methyl carbon and the carbons of the phenyl ring are present.	[1]
Mass Spectrometry (GC-MS)	The molecular ion peak (m/z = 156) is a prominent feature. Fragmentation patterns can provide further structural information.	[1]
Infrared (IR) Spectroscopy	Characteristic absorptions for C-H bonds (aromatic and aliphatic) and C-S stretching vibrations are expected.	[1]

V. Applications and Biological Relevance

Methyl phenyl disulfide and related unsymmetrical disulfides are of interest in several fields:

- Synthetic Chemistry: They serve as intermediates in the synthesis of more complex sulfur-containing molecules. [3]* Flavor and Fragrance: Some disulfides are known for their distinct

© 2026 BenchChem. All rights reserved.

aromas and are used as flavoring agents. [3]* Biological Activity: The disulfide bond is a key functional group in many biologically active molecules. Unsymmetrical disulfides have been investigated for their potential antimicrobial, anti-inflammatory, and anticancer properties. [3] [10]The thiol-disulfide exchange mechanism is central to the function of many redox-active proteins and enzymes. [11][12]

VI. Safety and Handling

Methyl phenyl disulfide is a flammable liquid and vapor and is harmful if swallowed. [1]Appropriate personal protective equipment (PPE), including gloves, safety glasses, and a lab coat, should be worn when handling this chemical. Work should be conducted in a well-ventilated fume hood. For detailed safety information, refer to the Safety Data Sheet (SDS).

Conclusion

Methyl phenyl disulfide is a versatile and reactive molecule with a rich chemistry centered around its unsymmetrical disulfide bond. A thorough understanding of its synthesis, reactivity, and analytical characterization is essential for its effective application in research and development. The methodologies and insights provided in this guide serve as a foundational resource for scientists and professionals working with this and related organosulfur compounds.

References

- On the mechanism of spontaneous thiol–disulfide exchange in proteins - RSC Publishing. 13
- Thiol-disulfide exchange in signaling: disulfide bonds as a switch - PubMed. 11
- Disulfide - Wikipedia.
- Kinetics and Mechanisms of Thiol–Disulfide Exchange Covering Direct Substitution and Thiol Oxidation-Mediated Pathways - PMC.
- Thiol–disulfide exchange is involved in the catalytic mechanism of peptide methionine sulfoxide reductase | PNAS.
- **Methyl phenyl disulfide** | C7H8S2 | CID 84234 - PubChem.

© 2026 BenchChem. All rights reserved.

- Buy **Methyl phenyl disulfide** | 14173-25-2 - Smolecule.
- Methyl phenylsulfide - SpectraBase.
- Disulfide, bis(4-methylphenyl) | C14H14S2 | CID 66027 - PubChem.
- Diphenyl disulfide - Organic Syntheses Procedure.
- Reaction of Phenyl and Methyl Disulfide with ·Cr(CO)3C5Me5 and HCr(CO)3C5Me5. Metal Radical and Metal Hydride Reactivity at the Sulfur−Sulfur Bond. Different Mechanisms for Oxidative Addition of Alkyl and Aryl Disulfides | Inorganic Chemistry - ACS Publications.
- **methyl phenyl disulfide** methyldisulfanylbenzene - The Good Scents Company.
- Synthesis of unsymmetrical disulfides via the cross-dehydrogenation of thiols.
- Bis(2-methylphenyl) disulfide | C14H14S2 | CID 77652 - PubChem.
- Diphenyl disulfide - Wikipedia.
- Disulfide, methyl phenyl - NIST WebBook.
- ^{13}C NMR spectra of bis(4-methylphenyl) disulfide (a) and... - ResearchGate.
- Reactivity of disulfide bonds is markedly affected by structure and environment: implications for protein modification and stability - NIH.
- Solvent-Free Reaction for Unsymmetrical Organodisulfides with High Purity and Application as Cathode-Active Materials - MDPI.
- Reaction of Phenyl and Methyl Disulfide with ·Cr(CO)3C5Me5 and HCr(CO)3C5Me5. Metal Radical and Metal Hydride Reactivity at the Sulfur−Sulfur Bond. Different Mechanisms for Oxidative Addition of Alkyl and Aryl Disulfides | Inorganic Chemistry - ACS Publications.
- Oxidation of Disulfides to Thiolsulfinates with Hydrogen Peroxide and a Cyclic Seleninate Ester Catalyst - MDPI.
- Oxidations of methyl phenyl sulfide a . | Download Table - ResearchGate.

© 2026 BenchChem. All rights reserved.

- SUPPORTING INFORMATION - The Royal Society of Chemistry.
- Oxidative Coupling of Methyl Phenyl Sulfide via Sulfonium Formation Using an Oxovanadium Complex | The Journal of Organic Chemistry - ACS Publications.
- Synthesis and Biological Activity of Unsymmetrical Monoterpenylhetaryl Disulfides - PMC.
- Efficient and practical synthesis of unsymmetrical disulfides via base-catalyzed aerobic oxidative dehydrogenative coupling of thiols - Organic Chemistry Frontiers (RSC Publishing).
- Disulfide, bis(4-methylphenyl) - NIST WebBook.
- **Methyl phenyl disulfide** (C7H8S2) - PubChemLite.
- **METHYL PHENYL DISULFIDE** CAS#: 14173-25-2 - ChemicalBook.
- Disulfide synthesis by S-S coupling - Organic Chemistry Portal.
- Disulfide, bis(4-methylphenyl) - NIST WebBook.
- Breaking a Couple: Disulfide Reducing Agents 1 - Digital CSIC.
- Electronic Supplementary Information - The Royal Society of Chemistry.

Need Custom Synthesis?

BenchChem offers custom synthesis for rare earth carbides and specific isotopiclabeling.

Email: info@benchchem.com or Request Quote Online.

Sources

- 1. Methyl phenyl disulfide | C7H8S2 | CID 84234 - PubChem [pubchem.ncbi.nlm.nih.gov]
- 2. Disulfide, methyl phenyl [webbook.nist.gov]
- 3. Buy Methyl phenyl disulfide | 14173-25-2 [smolecule.com]
- 4. methyl phenyl disulfide, 14173-25-2 [thegoodscentscompany.com]
- 5. Disulfide - Wikipedia [en.wikipedia.org]

© 2026 BenchChem. All rights reserved.

- 6. researchgate.net [researchgate.net]
- 7. Organic Syntheses Procedure [orgsyn.org]
- 8. Efficient and practical synthesis of unsymmetrical disulfides via base-catalyzed aerobic oxidative dehydrogenative coupling of thiols - Organic Chemistry Frontiers (RSC Publishing) [pubs.rsc.org]
- 9. mdpi.com [mdpi.com]
- 10. Synthesis and Biological Activity of Unsymmetrical Monoterpenylhetaryl Disulfides - PMC [pmc.ncbi.nlm.nih.gov]
- 11. Thiol-disulfide exchange in signaling: disulfide bonds as a switch - PubMed [pubmed.ncbi.nlm.nih.gov]
- 12. pnas.org [pnas.org]
- 13. On the mechanism of spontaneous thiol–disulfide exchange in proteins - Physical Chemistry Chemical Physics (RSC Publishing) [pubs.rsc.org]

- To cite this document: BenchChem. [An In-depth Technical Guide to the Chemical Properties of Methyl Phenyl Disulfide]. BenchChem, [2026]. [Online PDF]. Available at: [https://www.benchchem.com/product/b081605/docs#an-in-depth-technical-guide-to-the-chemical-properties-of-methyl-phenyl-disulfide]

Disclaimer & Data Validity:

The information provided in this document is for Research Use Only (RUO) and is strictly not intended for diagnostic or therapeutic procedures. While BenchChem strives to provide accurate protocols, we make no warranties, express or implied, regarding the fitness of this product for every specific experimental setup.

Technical Support: The protocols provided are for reference purposes. Unsure if this reagent suits your experiment?

Need Industrial/Bulk Grade? Request Custom Synthesis Quote

© 2026 BenchChem. All rights reserved.

BenchChem

Our mission is to be the trusted global source of essential and advanced chemicals, empowering scientists and researchers to drive progress in science and industry.

Contact

Address: 3281 E Guasti Rd

Ontario, CA 91761, United States

Phone: (601) 213-4426

Email: info@benchchem.com

Contact our Ph.D. Support Team for a compatibility check

© 2026 BenchChem. All rights reserved.