Lanabecestat's Selectivity for BACE1 vs. BACE2: A Technical Overview

Author: BenchChem Technical Support Team. **Date**: April 2026

Compound of Interest

Compound Name:	*Lanabecestat*
CAS No.:	*1383984-21-1*
Cat. No.:	*B8082136*

Get Quote

For Researchers, Scientists, and Drug Development Professionals

Introduction

Lanabecestat (also known as AZD3293 or LY3314814) is a potent inhibitor of β-site amyloid precursor protein cleaving enzyme 1 (BACE1), a key enzyme in the amyloidogenic pathway that leads to the production of amyloid-β (Aβ) peptides. The accumulation of Aβ in the brain is a central pathological hallmark of Alzheimer's disease. As such, BACE1 has been a prime therapeutic target for the development of disease-modifying therapies. However, the closely related homolog, BACE2, presents a challenge for selective inhibition due to the high degree of similarity in their active sites. This technical guide provides an in-depth analysis of **lanabecestat**'s selectivity for BACE1 versus BACE2, summarizing key quantitative data and detailing the experimental methodologies used for its characterization.

Quantitative Selectivity Profile

Lanabecestat has been demonstrated to be a highly potent but largely non-selective inhibitor of both BACE1 and BACE2. The following table summarizes the key inhibitory constants derived from in vitro assays.

© 2026 BenchChem. All rights reserved.

Parameter	BACE1	BACE2	Selectivity (BACE2/BACE1)
Ki (nM)	0.4	0.8	2
IC50 (nM) - Binding Assay	0.6	0.9	1.5

Ki (inhibition constant) and IC50 (half-maximal inhibitory concentration) values are critical metrics for assessing inhibitor potency. The low nanomolar values for both BACE1 and BACE2 indicate that **lanabecestat** potently inhibits both enzymes. The selectivity ratio, calculated by dividing the BACE2 value by the BACE1 value, is close to 1, confirming the lack of significant selectivity.

Signaling Pathways and Experimental Workflows

The following diagrams illustrate the relevant biological pathways and a typical experimental workflow for determining BACE inhibitor selectivity.

© 2026 BenchChem. All rights reserved.

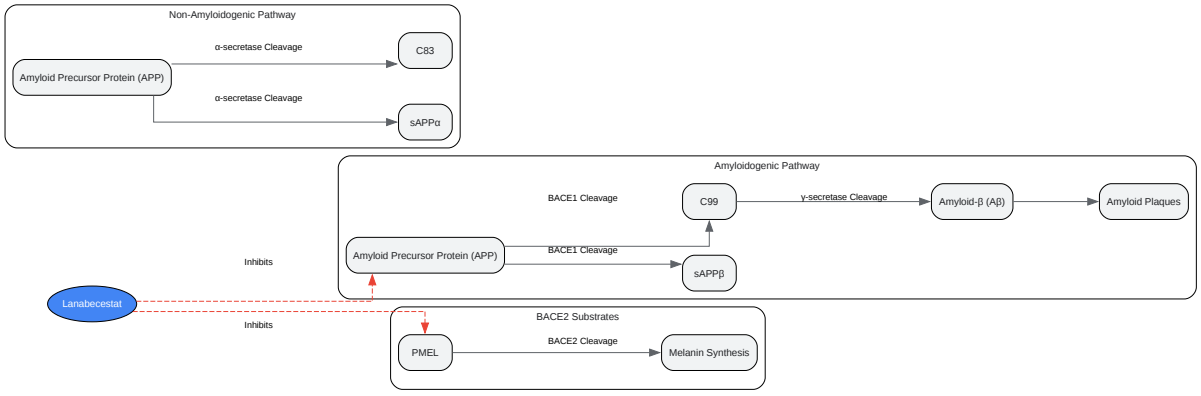

Click to download full resolution via product page

Fig. 1: BACE1 and BACE2 in APP processing and melanin synthesis.

© 2026 BenchChem. All rights reserved.

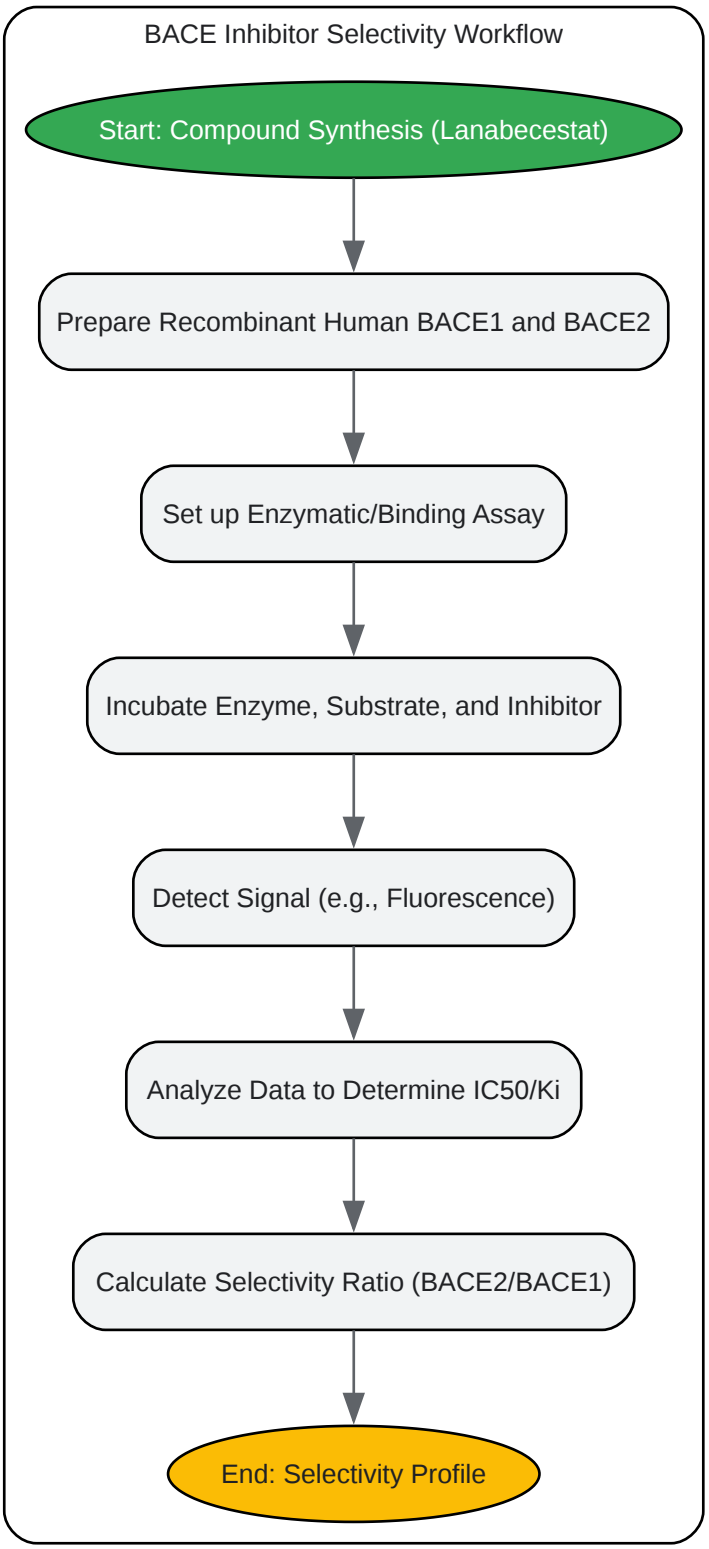

Click to download full resolution via product page

Fig. 2: Experimental workflow for BACE inhibitor selectivity.

© 2026 BenchChem. All rights reserved.

Experimental Protocols

The determination of **lanabecestat**'s selectivity for BACE1 versus BACE2 involves robust in vitro assays. The following are detailed methodologies for the key experiments cited.

BACE1 and BACE2 Enzymatic Activity Assay (Fluorescence Resonance Energy Transfer - FRET)

This assay measures the enzymatic activity of BACE1 and BACE2 by detecting the cleavage of a synthetic fluorogenic substrate.

- Principle: The FRET substrate consists of a fluorophore and a quencher molecule linked by a short peptide sequence corresponding to the BACE1 cleavage site on APP. In the intact substrate, the quencher suppresses the fluorescence of the fluorophore. Upon cleavage by BACE1 or BACE2, the fluorophore is separated from the quencher, resulting in an increase in fluorescence that is directly proportional to the enzyme's activity.
- Reagents:
  - Recombinant human BACE1 and BACE2 (purified)
  - FRET Substrate: e.g., A custom synthesized peptide containing the Swedish mutation of the APP cleavage site, flanked by a fluorophore (e.g., a rhodamine derivative) and a quencher.
  - Assay Buffer: 50 mM Sodium Acetate, pH 4.5.
  - **Lanabecestat**: Serial dilutions in assay buffer.
  - 96-well or 384-well black microplates.
- Procedure:
  - Add 10 µL of the **lanabecestat** dilution or vehicle control to the wells of the microplate.
  - Add 10 µL of the recombinant BACE1 or BACE2 enzyme solution to each well.
  - Initiate the reaction by adding 10 µL of the FRET substrate solution to each well.

© 2026 BenchChem. All rights reserved.

- Incubate the plate at room temperature (approximately 25°C) for a defined period (e.g., 60-90 minutes), protected from light.
- Measure the fluorescence intensity using a microplate reader with appropriate excitation and emission wavelengths for the chosen fluorophore (e.g., excitation at 545 nm and emission at 585 nm for a rhodamine-based substrate).
- The rate of increase in fluorescence is used to determine the enzyme activity.
- IC50 values are calculated by plotting the percent inhibition of enzyme activity against the logarithm of the **lanabecestat** concentration and fitting the data to a four-parameter logistic equation.

BACE1 and BACE2 Radioligand Binding Assay

This assay determines the affinity of **lanabecestat** for the active site of BACE1 and BACE2.

- Principle: A radiolabeled ligand with known affinity for the BACE1/BACE2 active site is incubated with the enzyme in the presence of varying concentrations of the unlabeled test compound (**lanabecestat**). The ability of **lanabecestat** to displace the radioligand from the enzyme's active site is measured, from which the inhibition constant (Ki) can be determined.
- Reagents:
  - Recombinant human BACE1 and BACE2 (purified)
  - Radioligand: A high-affinity, tritiated ([^{3}H]) or iodinated ([^{125}I]) BACE1/BACE2 inhibitor.
  - Assay Buffer: Appropriate buffer to maintain enzyme stability and activity (e.g., Tris-HCl or sodium acetate at a specific pH).
  - **Lanabecestat**: Serial dilutions in assay buffer.
  - Scintillation fluid and a scintillation counter.
  - Filter plates (e.g., glass fiber filters).
- Procedure:

© 2026 BenchChem. All rights reserved.

- In a multi-well plate, combine the recombinant BACE1 or BACE2 enzyme, the radioligand at a concentration near its Kd, and varying concentrations of **lanabecestat** or vehicle.
- Incubate the mixture to allow the binding to reach equilibrium.
- Separate the enzyme-bound radioligand from the unbound radioligand by rapid filtration through the filter plates. The filters will trap the enzyme and any bound radioligand.
- Wash the filters with ice-cold assay buffer to remove any non-specifically bound radioactivity.
- Allow the filters to dry, and then add scintillation fluid to each well.
- Measure the radioactivity on the filters using a scintillation counter.
- The amount of radioactivity is inversely proportional to the binding affinity of **lanabecestat**.
- The IC50 value is determined by plotting the percentage of specific binding against the logarithm of the **lanabecestat** concentration. The Ki value is then calculated from the IC50 using the Cheng-Prusoff equation.

Conclusion

The data and experimental methodologies outlined in this guide demonstrate that **lanabecestat** is a potent inhibitor of both BACE1 and BACE2, with minimal selectivity between the two enzymes. This lack of selectivity has been a consideration in its clinical development, as inhibition of BACE2 has been linked to off-target effects such as hypopigmentation. Understanding the nuanced selectivity profile of BACE inhibitors like **lanabecestat** is crucial for the rational design of future Alzheimer's disease therapeutics with improved safety and efficacy profiles. The detailed protocols provided herein serve as a valuable resource for researchers in the field to accurately assess the selectivity of novel BACE inhibitors.

- To cite this document: BenchChem. [Lanabecestat's Selectivity for BACE1 vs. BACE2: A Technical Overview]. BenchChem, [2026]. [Online PDF]. Available at: [https://www.benchchem.com/product/b8082136/docs#lanabecestat-s-selectivity-for-bace1-vs-bace2-a-technical-overview]

© 2026 BenchChem. All rights reserved.

Disclaimer & Data Validity:

The information provided in this document is for Research Use Only (RUO) and is strictly not intended for diagnostic or therapeutic procedures. While BenchChem strives to provide accurate protocols, we make no warranties, express or implied, regarding the fitness of this product for every specific experimental setup.

Technical Support: The protocols provided are for reference purposes. Unsure if this reagent suits your experiment?

Need Industrial/Bulk Grade? Request Custom Synthesis Quote

BenchChem

Our mission is to be the trusted global source of essential and advanced chemicals, empowering scientists and researchers to drive progress in science and industry.

Contact

Address: 3281 E Guasti Rd

Ontario, CA 91761, United States

Phone: (601) 213-4426

Email: info@benchchem.com

Contact our Ph.D. Support Team for a compatibility check

© 2026 BenchChem. All rights reserved.