Application Note: Solvent Selection for 4-(tert-Butyl)oxazol-2-amine Reactions

Author: BenchChem Technical Support Team. **Date**: April 2026

Compound of Interest

Compound Name:	*4-(tert-Butyl)oxazol-2-amine hydrochloride*
Cat. No.:	*B8045278*

Get Quote

Executive Summary

This guide provides an evidence-based framework for solvent selection in reactions involving 4-(tert-Butyl)oxazol-2-amine (CAS 97567-79-8).[1] Unlike simple alkyl amines, this scaffold presents a unique challenge: it combines a weakly nucleophilic, heteroaromatic amine with a bulky lipophilic tert-butyl group at the C4 position.

Successful functionalization requires balancing solubility (driven by the lipophilic tail) with reactivity (limited by the electron-poor oxazole ring).[1] This protocol prioritizes "Green" solvent alternatives (e.g., 2-MeTHF, t-Amyl alcohol) where they offer equivalent or superior performance to traditional chlorinated or dipolar aprotic solvents.[1]

Physicochemical Profile & Reactivity[2][3][4][5][6][7]

Understanding the molecule's intrinsic properties is the first step in rational solvent design.[1]

© 2026 BenchChem. All rights reserved.

Property	Characteristic	Implication for Solvent Selection
Structure	2-Aminooxazole core with C4 tert-butyl group.[1]	The t-butyl group adds significant lipophilicity, making the molecule soluble in non-polar solvents (Toluene, DCM) where simple 2-aminooxazoles might precipitate.[1]
Nucleophilicity	Low (resembles aniline).[1]	The lone pair is delocalized into the oxazole ring.[1] Requires polar aprotic solvents or catalysis to react with weak electrophiles.[1]
Basicity (pKa)	Weak base (Conj.[1] Acid pKa 4.0–5.0).[1]	Requires non-nucleophilic bases (e.g., DIPEA, NaOtBu) to drive reactions; avoids protonation by acidic byproducts.
Sterics	High (C4 tert-butyl).[1][2][3]	The bulky group shields the C5 proton but also crowds the 2-amino site.[1] Solvents that form tight solvation shells may further hinder reactivity.[1]

Solvent Selection Decision Tree

The following logic flow dictates the optimal solvent system based on the intended reaction pathway.

© 2026 BenchChem. All rights reserved.

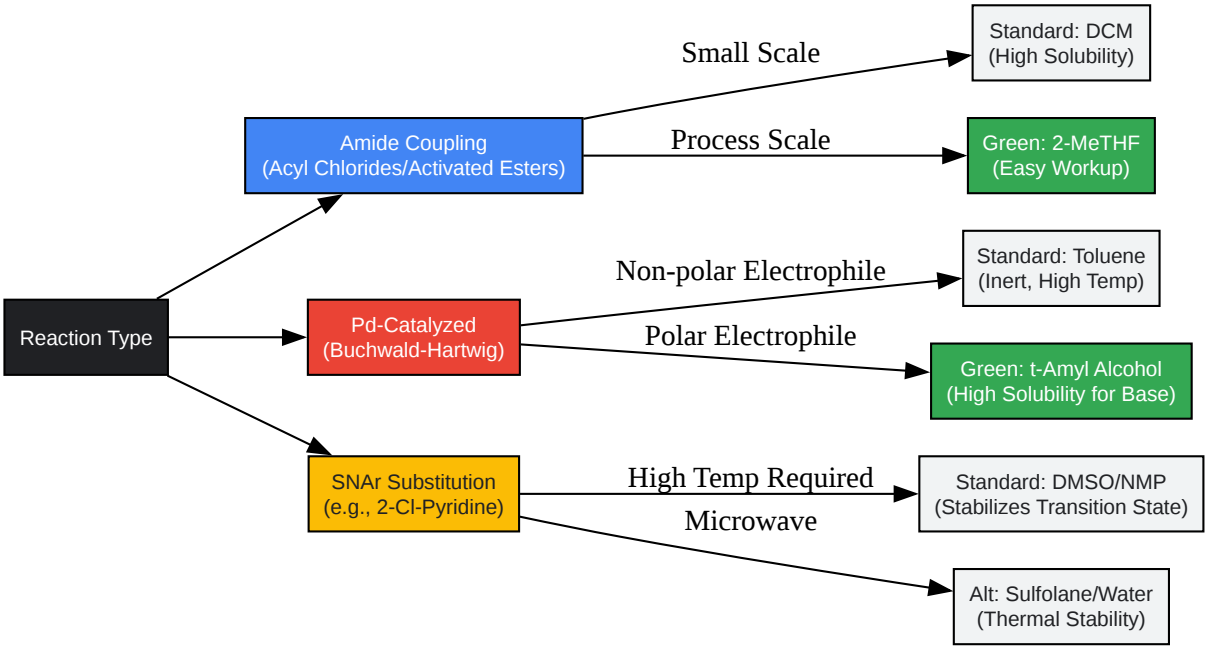

Click to download full resolution via product page

Figure 1: Decision matrix for solvent selection based on reaction mechanism.[1]

Detailed Protocols

Protocol A: Amide Coupling (Acylation)

Objective: Functionalization of the exocyclic amine with carboxylic acids or acid chlorides.[1] Challenge: The low nucleophilicity of the amine requires activation.[1] The tert-butyl group ensures solubility in green solvents like 2-MeTHF, avoiding the need for DMF.[1]

Reagents:

- Substrate: 4-(tert-Butyl)oxazol-2-amine (1.0 equiv)[1]
- Electrophile: Acid Chloride (1.1 equiv) or Carboxylic Acid + Coupling Agent (HATU/T3P)[1]
- Base: DIPEA (2.0 equiv) or Pyridine (3.0 equiv)[1]

© 2026 BenchChem. All rights reserved.

- Solvent: 2-Methyltetrahydrofuran (2-MeTHF) or Ethyl Acetate (EtOAc).[1]

Step-by-Step Methodology:

- Dissolution: Charge a reaction vessel with 4-(tert-Butyl)oxazol-2-amine (1.0 equiv) and 2-MeTHF (10 vol, i.e., 10 mL per gram).
  - Note: The lipophilic tert-butyl group ensures rapid dissolution in 2-MeTHF compared to unsubstituted aminooxazoles.[1]
- Base Addition: Add DIPEA (2.0 equiv) at room temperature.
- Activation/Addition:
  - If using Acid Chloride: Cool to 0°C. Add acid chloride dropwise to control exotherm.[1]
  - If using Acid/HATU: Pre-activate the acid with HATU (1.1 equiv) and DIPEA in a separate vessel for 15 mins, then add the amine solution.
- Reaction: Stir at 25°C for 4–12 hours. Monitor by LCMS.[1]
  - Checkpoint: If conversion is <50% after 4 hours, heat to 50°C. The steric bulk of the tert-butyl group may hinder the approach of bulky acylating agents.
- Workup: Add water (5 vol). Separate phases. Wash organic layer with 1M HCl (to remove unreacted amine) and sat.[1] NaHCO3. Dry over MgSO4 and concentrate.

Protocol B: Buchwald-Hartwig Cross-Coupling

Objective: N-Arylation with aryl halides.[1] Challenge: Competitive binding of the oxazole nitrogen to Palladium. Solvent Strategy: Use t-Amyl Alcohol or Toluene. t-Amyl alcohol is superior for solubilizing the inorganic base (NaOtBu) and is a greener alternative to Dioxane.[1]

Reagents:

- Substrate: 4-(tert-Butyl)oxazol-2-amine (1.0 equiv)[1]
- Aryl Halide: Ar-Br or Ar-I (1.0 equiv)[1]

© 2026 BenchChem. All rights reserved.

- Catalyst: Pd2(dba)3 (2 mol%) + Xantphos (4 mol%) OR BrettPhos Pd G4.[1]
- Base: NaOtBu (1.5 equiv) - Critical for deprotonating the amide-like NH.[1]
- Solvent:t-Amyl Alcohol (anhydrous).[1]

Step-by-Step Methodology:

- Inertion: Purge the reaction vial with Nitrogen/Argon for 5 minutes.
- Charging: Add Pd catalyst, Ligand, Base, and Substrate solid.
- Solvent Addition: Add degassed t-Amyl alcohol (10 vol).
  - Why t-Amyl Alcohol? Its higher boiling point (102°C) allows for sufficient thermal activation without the toxicity of Toluene or the peroxide risk of Dioxane.
- Reaction: Heat to 90–100°C for 12 hours.
- Filtration: Cool to RT. Dilute with EtOAc. Filter through a pad of Celite to remove Palladium black.[1]
- Purification: Concentrate and purify via flash chromatography (Hexane/EtOAc).

Troubleshooting & Optimization

© 2026 BenchChem. All rights reserved.

Issue	Probable Cause	Corrective Action
Low Conversion (Acylation)	Low nucleophilicity of amine.[1]	Switch solvent to Pyridine (acts as both solvent and nucleophilic catalyst).[1] Heat to 60°C.
Reaction Stalls (Pd-Coupling)	Catalyst poisoning by oxazole N.	Switch to a bulky ligand (e.g., BrettPhos or tBuBrettPhos) to prevent N-coordination to the metal center.[1]
Precipitation of SM	Solubility limit reached.	The tert-butyl group usually aids solubility, but if using highly polar solvents (MeOH), switch to DCM or THF.
Regioisomers (SNAr)	Attack at endocyclic N.	Use a non-polar solvent (Toluene) to disfavor the charge-separated transition state required for endocyclic attack.[1]

Scientific Rationale (Mechanism)[1][2][7][10][11]

The solvent choice is governed by the Hughes-Ingold rules applied to the specific electronics of the oxazole ring:

- Dipolar Aprotic Solvents (DMSO, DMF): Essential for SNAr reactions where the rate-determining step is the formation of a charged Meisenheimer complex.[1] The high dielectric constant stabilizes this intermediate.[1]
- Non-Polar Solvents (Toluene, Heptane): Preferred for Pd-catalysis to minimize chelation of the solvent to the metal center.[1] The tert-butyl group on the substrate renders it sufficiently soluble in these non-polar media, a distinct advantage over the parent 2-aminooxazole.[1]
- Protic Solvents (Alcohols): Generally avoided in acylation to prevent solvolysis of the electrophile, but t-Amyl alcohol is permissible in cross-coupling because its steric bulk

© 2026 BenchChem. All rights reserved.

prevents it from coordinating tightly to the catalyst or reacting with the base.[1]

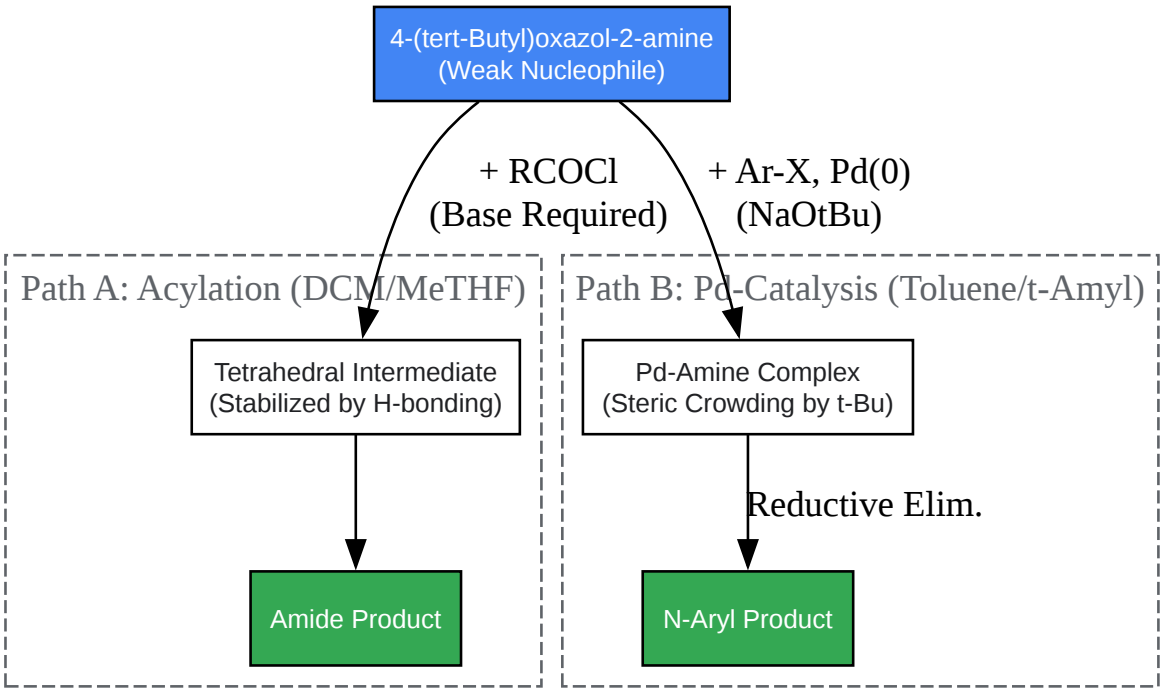

Click to download full resolution via product page

Figure 2: Mechanistic pathways highlighting the impact of solvent environment on reaction intermediates.[1]

References

- Buchwald-Hartwig Amination of Heterocycles
  - Title: "Pd-Catalyzed Amination of Aryl Halides with 2-Amino-Heterocycles"
  - Source:J. Am. Chem. Soc., 2008, 130, 13552.
  - URL:[Link][1]
- Green Solvent Selection
  - Title: "Sanofi's Solvent Selection Guide: A Step Toward More Sustainable Processes"
  - Source:Org.[1][4][5] Process Res. Dev., 2013, 17, 1517.

© 2026 BenchChem. All rights reserved.

- URL:[Link][1]

- Reactivity of 2-Aminooxazoles
  - Title: "2-Aminooxazole as a Novel Privileged Scaffold in Antitubercular Medicinal Chemistry"[1][6]
  - Source:ACS Med.[1][6] Chem. Lett., 2020, 11, 1435.[6]
  - URL:[Link][1]
- Nucleophilicity Trends
  - Title: "Nucleophilicity of Amines: Steric vs Electronic Effects"[7]
  - Source:Master Organic Chemistry
  - URL:[Link]

Need Custom Synthesis?

BenchChem offers custom synthesis for rare earth carbides and specific isotopiclabeling.

Email: info@benchchem.com or Request Quote Online.

Sources

- 1. rsc.org [rsc.org]
- 2. molcore.com [molcore.com]
- 3. Seminole State College Virtual Tour [sscok.edu]
- 4. masterorganicchemistry.com [masterorganicchemistry.com]
- 5. masterorganicchemistry.com [masterorganicchemistry.com]
- 6. researchgate.net [researchgate.net]
- 7. reddit.com [reddit.com]
- To cite this document: BenchChem. [Application Note: Solvent Selection for 4-(tert-Butyl)oxazol-2-amine Reactions]. BenchChem, [2026]. [Online PDF]. Available at:

[https://www.benchchem.com/product/b8045278/docs#application-note-solvent-selection-for-4-tert-butyl-oxazol-2-amine-reactions]

Disclaimer & Data Validity:

The information provided in this document is for Research Use Only (RUO) and is strictly not intended for diagnostic or therapeutic procedures. While BenchChem strives to provide accurate protocols, we make no warranties, express or implied, regarding the fitness of this product for every specific experimental setup.

Technical Support: The protocols provided are for reference purposes. Unsure if this reagent suits your experiment?

Need Industrial/Bulk Grade? Request Custom Synthesis Quote

BenchChem

Our mission is to be the trusted global source of essential and advanced chemicals, empowering scientists and researchers to drive progress in science and industry.

Contact

Address: 3281 E Guasti Rd

Ontario, CA 91761, United States

Phone: (601) 213-4426

Email: info@benchchem.com

Contact our Ph.D. Support Team for a compatibility check

© 2026 BenchChem. All rights reserved.