Technical Guide: UV-Vis Absorption Maxima of Substituted N-Trityl Maleimides

Author: BenchChem Technical Support Team. **Date**: April 2026

Compound of Interest

Compound Name:	*3,4-Dichloro-1-tritylpyrrole-2,5-dione*
Cat. No.:	*B8018690*

Get Quote

Executive Summary & Application Context

N-trityl maleimides represent a specialized class of maleimide derivatives where the nitrogen atom is protected by a bulky triphenylmethyl (trityl) group. Unlike N-phenyl maleimides, where the aromatic ring is conjugated to the maleimide system, the N-trityl group is attached via a tetrahedral (

) carbon. This structural feature electronically "insulates" the maleimide chromophore while providing massive steric shielding.

This guide characterizes the UV-Vis spectral fingerprints of these compounds. Accurate determination of

and molar extinction coefficients (

) is critical for:

- Quantifying functionalization of polymers or surfaces.
- Monitoring deprotection kinetics (removal of the trityl group under acidic conditions).

© 2026 BenchChem. All rights reserved.

- Purity analysis during the synthesis of antibody-drug conjugates (ADCs) where maleimide hydrolysis is a liability.

The Chromophore Landscape: Spectral Deconvolution

To interpret the spectrum of a substituted N-trityl maleimide, one must deconvolve two distinct chromophores that often overlap in the UV region (200–300 nm).

The Two Primary Chromophores

Chromophore	Transition Type	(Typical)	( )	Note
Maleimide Core		215 – 220 nm	> 10,000	Strong absorption; solvent dependent.[1]
Maleimide Core		290 – 300 nm	300 – 700	Weak, "forbidden" transition; diagnostic for the intact ring.
Trityl Group	(Aromatic)	254 – 260 nm	700 – 1,500	Fine structure often visible (shoulders); intensity scales with substituents. [1]

Comparative Spectral Data

The following table synthesizes data comparing N-trityl maleimide with its structural analogs. Note the "Insulation Effect" in the N-Trityl entry.

© 2026 BenchChem. All rights reserved.

Table 1: Comparative UV-Vis Maxima of N-Substituted Maleimides

Compound Class	N-Substituent Structure	(nm)	Electronic Effect
N-Alkyl Maleimide	(Ethyl)	218, 298	Reference standard. [1] No conjugation between N-substituent and ring.
N-Phenyl Maleimide	(Phenyl)	225, 315	Red Shift (Bathochromic). The N-phenyl ring conjugates with the maleimide carbonyls, lowering the HOMO-LUMO gap [1].
N-Trityl Maleimide	(Trityl)	219, 259 (sh), 295	Insulated. The steric bulk twists the phenyl rings, and the carbon prevents conjugation.[1] The spectrum is roughly the sum of N-alkyl maleimide + benzene [2].
N-(4-Methoxytrityl)		230, 275, 295	Auxochromic Shift. The methoxy group red-shifts the trityl contribution (259 275 nm) but leaves the maleimide (295 nm) largely unaffected.[1]

© 2026 BenchChem. All rights reserved.

> *Critical Insight: Unlike N-phenyl maleimides, substituents on the trityl ring (e.g., -OMe, -NO2) exert minimal influence on the maleimide double bond reactivity or its specific absorption (295 nm).[1] They primarily alter the 240–280 nm region associated with the protecting group itself.*

Mechanistic Insights: The "Propeller" Effect

Understanding the 3D structure is essential for interpreting the UV data.

- Steric Decoupling: The trityl group adopts a "propeller" shape to minimize steric clash between the three phenyl rings. This prevents coplanarity.[1]
- Electronic Insulation: The central carbon of the trityl group is

  hybridized. There is no orbital overlap between the

  -system of the trityl phenyl rings and the

  -system of the maleimide carbonyls.
- Consequence: The UV spectrum is additive.
  - [1]
  - This allows researchers to use the 295 nm band to quantify the maleimide content specifically, even in the presence of the trityl group (which absorbs maximally at 259 nm).

Experimental Protocol: Precise Determination of

This protocol is designed to eliminate common errors caused by solvent cut-offs and hydrolysis.

Materials

© 2026 BenchChem. All rights reserved.

- Solvent: Acetonitrile (MeCN) or Dichloromethane (DCM), HPLC Grade.[1] (Avoid alcohols like Methanol which can undergo Michael addition to the maleimide over time).
- Blank: Pure solvent.[1]
- Equipment: Double-beam UV-Vis Spectrophotometer (e.g., Agilent Cary 60 or Shimadzu UV-1900).

Workflow

- Stock Preparation:
  - Weigh ~5.0 mg of N-trityl maleimide derivative (accuracy 0.01 mg).
  - Dissolve in 10.0 mL MeCN (Concentration 1-2 mM).
  - Note: Sonicate to ensure complete dissolution; trityl derivatives can be hydrophobic.[1]
- Serial Dilution:
  - Prepare 5 dilutions ranging from 10 M to 100 M.
  - Target Absorbance: 0.1 – 1.0 AU (Linear range of Beer-Lambert Law).[1]
- Measurement:
  - Scan range: 200 nm to 400 nm.[1]
  - Scan rate: 600 nm/min.[1]
  - Baseline correction: Auto-zero with solvent blank.

© 2026 BenchChem. All rights reserved.

- Data Analysis (Self-Validating Step):
  - Plot Absorbance vs. Concentration (M) for

    (e.g., 259 nm and 295 nm).[1]
  - Perform linear regression (

).[1]
  - Validation:

    must be

    .[1] The y-intercept (

) should be near zero.
  - The slope (

) is the Molar Extinction Coefficient (

).

Visualization: Electronic States & Workflow

The following diagrams illustrate the lack of conjugation in N-trityl systems compared to N-phenyl, and the experimental decision tree.

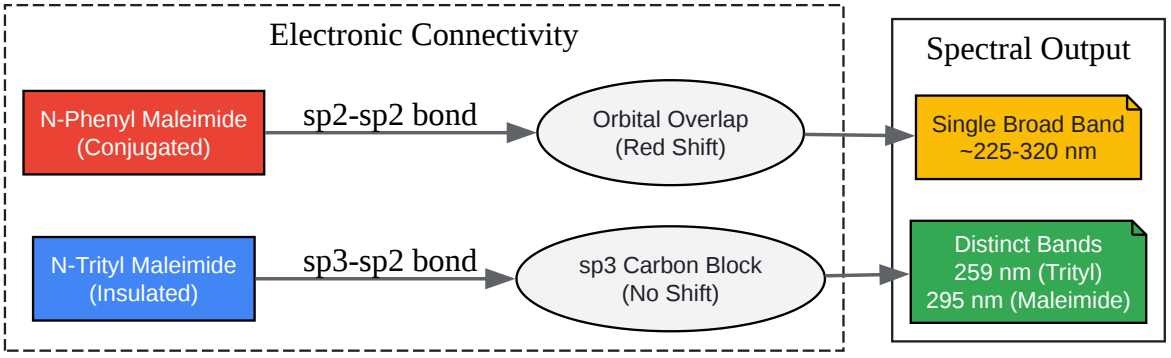

© 2026 BenchChem. All rights reserved.

Click to download full resolution via product page

Caption: Figure 1. Electronic decoupling in N-Trityl maleimides results in distinct spectral bands compared to conjugated N-Phenyl analogs.

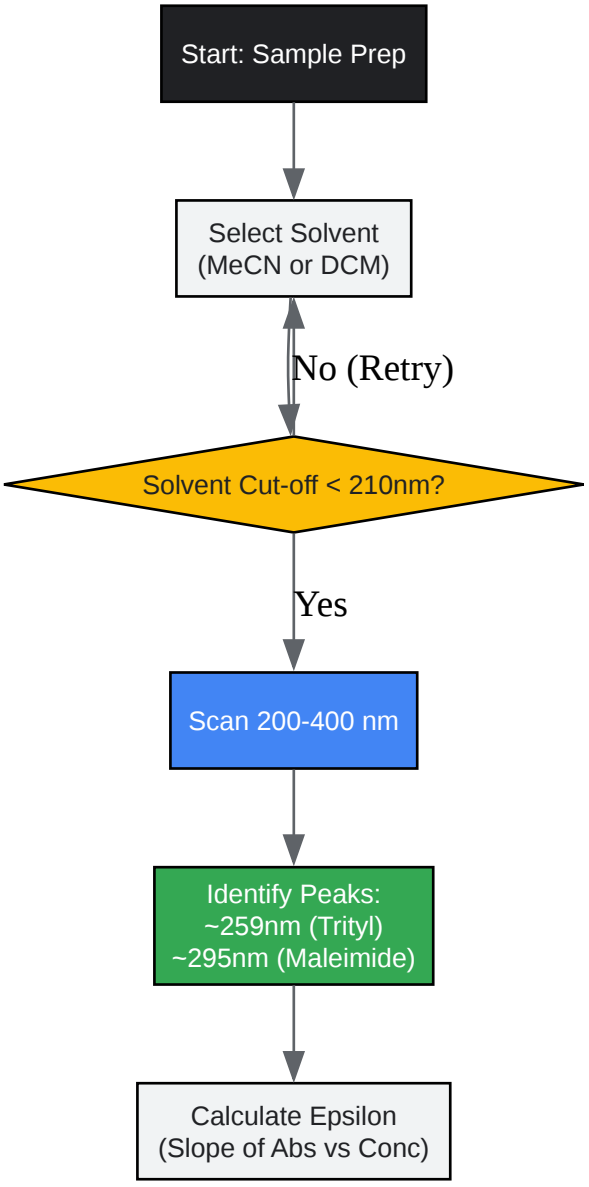

Click to download full resolution via product page

Caption: Figure 2. Step-by-step workflow for accurate determination of extinction coefficients.

References

- ResearchGate.Effects of substituent and solvent on the structure and spectral properties of maleimide derivatives. Available at: [Link]
- MDPI.Evaluation of Substituted N-Aryl Maleimide and Acrylamides for Bioconjugation. Available at: [Link][1][2]
- RSC Advances.Synthesis and photophysical properties of blue emission maleimide molecules. Available at: [Link][2][3][4][5][6][7][8][9]
- NIST.Extinction Coefficients of Triplet–Triplet Absorption Spectra of Organic Molecules. Available at: [Link][1][2][5]

Need Custom Synthesis?

BenchChem offers custom synthesis for rare earth carbides and specific isotopiclabeling.

Email: info@benchchem.com or Request Quote Online.

Sources

- 1. rsc.org [rsc.org]
- 2. Integrated computational and experimental design of fluorescent heteroatom-functionalised maleimide derivatives - Chemical Science (RSC Publishing) DOI:10.1039/D4SC04816D [pubs.rsc.org]
- 3. researchgate.net [researchgate.net]
- 4. researchgate.net [researchgate.net]
- 5. mdpi.com [mdpi.com]
- 6. researchgate.net [researchgate.net]
- 7. researchgate.net [researchgate.net]
- 8. UV–Vis Absorption Properties of New Aromatic Imines and Their Compositions with Poly({4,8-bis[(2-Ethylhexyl)oxy]Benzo[1,2-b:4,5-b']Dithiophene-2,6-diyl}{3-Fluoro-2-[(2-Ethylhexyl)Carbonyl]Thieno[3,4-b]Thiophenediyl}) - PMC [pmc.ncbi.nlm.nih.gov]
- 9. Integrated computational and experimental design of fluorescent heteroatom-functionalised maleimide derivatives - PMC [pmc.ncbi.nlm.nih.gov]

© 2026 BenchChem. All rights reserved.

- To cite this document: BenchChem. [Technical Guide: UV-Vis Absorption Maxima of Substituted N-Trityl Maleimides]. BenchChem, [2026]. [Online PDF]. Available at: [https://www.benchchem.com/product/b8018690/docs#technical-guide-uv-vis-absorption-maxima-of-substituted-n-trityl-maleimides]

Disclaimer & Data Validity:

The information provided in this document is for Research Use Only (RUO) and is strictly not intended for diagnostic or therapeutic procedures. While BenchChem strives to provide accurate protocols, we make no warranties, express or implied, regarding the fitness of this product for every specific experimental setup.

Technical Support: The protocols provided are for reference purposes. Unsure if this reagent suits your experiment?

Need Industrial/Bulk Grade? Request Custom Synthesis Quote

BenchChem

Our mission is to be the trusted global source of essential and advanced chemicals, empowering scientists and researchers to drive progress in science and industry.

Contact

Address: 3281 E Guasti Rd

Ontario, CA 91761, United States

Phone: (601) 213-4426

Email: info@benchchem.com

Contact our Ph.D. Support Team for a compatibility check