Applications of MTSEA-Biotin in Research: A Technical Guide

Author: BenchChem Technical Support Team. **Date**: April 2026

Compound of Interest

Compound Name: *MTSEA-biotin*

Cat. No.: *B8018010*

Get Quote

For Researchers, Scientists, and Drug Development Professionals

Introduction

[2-(Aminoethyl)methanethiosulfonate]-biotin (**MTSEA-biotin**) is a membrane-impermeant, thiol-reactive biotinylating reagent that has become an indispensable tool in modern biological research.[1][2] Its ability to specifically and covalently label free sulfhydryl groups, primarily from cysteine residues in proteins and 4-thiouridine in RNA, underpins its wide range of applications.[3][4] This technical guide provides an in-depth overview of the core applications of **MTSEA-biotin**, complete with detailed experimental protocols, quantitative data summaries, and visual diagrams to facilitate its effective implementation in the laboratory.

The fundamental principle behind **MTSEA-biotin**'s utility lies in its methanethiosulfonate (MTS) group, which readily reacts with the thiol side chain of cysteine to form a stable disulfide bond.[5] The attached biotin moiety then serves as a high-affinity tag for detection, purification, and quantification using avidin or streptavidin-based methods.[6] This targeted labeling approach has proven particularly powerful in the study of protein structure and function, especially for membrane proteins like ion channels and transporters, as well as in the analysis of nascent RNA transcripts.

© 2026 BenchChem. All rights reserved.

Core Applications of **MTSEA-Biotin**

Substituted Cysteine Accessibility Method (SCAM)

The Substituted Cysteine Accessibility Method (SCAM) is a powerful technique used to map the structure and dynamics of proteins, particularly the aqueous-accessible surfaces of membrane proteins.[4][7] SCAM, in conjunction with site-directed mutagenesis, allows researchers to identify residues lining a channel pore, a transporter translocation pathway, or a ligand-binding pocket.[3][8] The impermeant nature of **MTSEA-biotin** is crucial for this application, as it restricts labeling to cysteine residues accessible from the extracellular space in intact cells.[8][9]

Key insights gained from SCAM using **MTSEA-biotin** include:

- Topological analysis: Determining which parts of a membrane protein are exposed to the extracellular or intracellular environment.[8][10]
- Identification of channel-lining residues: Cysteine residues that are modified by **MTSEA-biotin**, leading to an alteration in channel function (e.g., block or potentiation), are inferred to be located within the ion channel pore.[3]
- Conformational changes: By comparing the accessibility of engineered cysteines in different functional states of a protein (e.g., open vs. closed state of an ion channel), researchers can map the conformational rearrangements that occur during protein function.[3][11]
- Mapping ligand binding sites: Protection of a cysteine residue from **MTSEA-biotin** modification by a ligand suggests that the residue is located within or near the ligand-binding pocket.[11]

Labeling and Purification of Nascent RNA

MTSEA-biotin, particularly in its longer linker form **MTSEA-biotin**-XX, is also a valuable tool for the selective labeling and enrichment of newly transcribed RNA.[12][13] This method relies on the metabolic incorporation of 4-thiouridine (4sU) into RNA in living cells. The thiol group of the incorporated 4sU is then specifically targeted by **MTSEA-biotin**-XX. The biotinylated RNA can then be efficiently captured using streptavidin-coated beads, allowing for the isolation and

© 2026 BenchChem. All rights reserved.

subsequent analysis of the nascent transcriptome through techniques like RNA sequencing (nascent-RNA-seq or 4sU-seq).[12][14]

Advantages of this method include:

- High efficiency and specificity: The reaction between the MTS group and the 4-thiouridine is highly specific and efficient.[12]
- Reversible labeling: The disulfide bond formed can be cleaved with reducing agents like dithiothreitol (DTT), allowing for the elution of the labeled RNA from the streptavidin beads.[12][13]
- Temporal resolution: By controlling the duration of the 4sU pulse, researchers can label and analyze RNA transcripts synthesized within a specific time window.

Quantitative Data Summary

The following tables summarize typical quantitative parameters for experiments utilizing **MTSEA-biotin**, derived from various research applications.

Table 1: Typical Concentrations and Incubation Parameters for **MTSEA-Biotin** Labeling

Application	Target Molecule	MTSEA-Biotin Concentration	Incubation Time	Incubation Temperature	Reference(s)
SCAM (Cell Surface Proteins)	Cysteine Residues	1 - 2 mM	10 - 30 min	Room Temperature	[3][15]
SCAM (Microsomes)	Cysteine Residues	1 mM	Not specified	4°C	[8][10]
Nascent RNA Labeling	4-Thiouridine	0.1 mg/mL (MTSEA-biotin-XX)	30 min	Room Temperature	[12][13]

© 2026 BenchChem. All rights reserved.

Table 2: Quantitative Effects of **MTSEA-Biotin** Modification on Ion Channel Function

Ion Channel	Cysteine Mutant	Effect of MTSEA-Biotin	Quantitative Change	Reference(s)
P2X1 Receptor	N290C, F291C, R292C, K309C	Reduced ATP potency	Shift in EC50	[3]
GABA-A Receptor	α1F64C	Irreversible inhibition	Reduction in GABA-mediated current	[11]

Experimental Protocols

Protocol 1: Substituted Cysteine Accessibility Method (SCAM) for Cell Surface Proteins

This protocol outlines the general steps for performing SCAM on cultured cells expressing a cysteine-substituted membrane protein of interest.

Materials:

- Cultured cells expressing the cysteine-mutant protein.
- Phosphate-buffered saline (PBS), pH 7.4.
- **MTSEA-biotin** stock solution (e.g., 50 mM in DMSO, stored at -20°C).[8]
- Quenching solution (e.g., PBS containing 100 mM glycine or cysteine).
- Lysis buffer (e.g., RIPA buffer with protease inhibitors).
- Streptavidin-agarose beads.
- SDS-PAGE and Western blotting reagents.
- Antibody against the protein of interest.

Procedure:

© 2026 BenchChem. All rights reserved.

- Cell Preparation:
  - Plate cells expressing the protein of interest and grow to a suitable confluency.
  - Wash the cells three times with ice-cold PBS to remove any residual culture medium.[16]
- **MTSEA-Biotin** Labeling:
  - Prepare the **MTSEA-biotin** working solution by diluting the stock solution in PBS to the desired final concentration (e.g., 1-2 mM).[3] Prepare this solution fresh before each experiment.
  - Incubate the cells with the **MTSEA-biotin** working solution for 30 minutes at room temperature.[16] For control experiments (e.g., protection assays), pre-incubate with the ligand before and during the **MTSEA-biotin** labeling step.
- Quenching:
  - Remove the **MTSEA-biotin** solution and wash the cells three times with quenching solution to stop the reaction.[16]
- Cell Lysis:
  - Lyse the cells with ice-cold lysis buffer.
  - Centrifuge the lysate to pellet cell debris and collect the supernatant.
- Purification of Biotinylated Proteins:
  - Incubate the cell lysate with streptavidin-agarose beads for 2-4 hours at 4°C with gentle rotation to capture the biotinylated proteins.
  - Wash the beads several times with lysis buffer to remove non-specifically bound proteins.
- Analysis:
  - Elute the bound proteins from the beads by boiling in SDS-PAGE sample buffer.

© 2026 BenchChem. All rights reserved.

- Separate the proteins by SDS-PAGE and transfer to a PVDF membrane.
- Probe the membrane with a primary antibody against the protein of interest, followed by a secondary antibody conjugated to HRP.
- Visualize the protein bands using a chemiluminescence detection system.

Protocol 2: Labeling and Enrichment of Nascent RNA

This protocol describes the labeling of nascent RNA with 4-thiouridine (4sU) and subsequent enrichment using **MTSEA-biotin**-XX.

Materials:

- Cultured cells.
- 4-thiouridine (4sU) stock solution.
- TRIzol reagent for RNA extraction.
- **MTSEA-biotin**-XX stock solution (e.g., 10 mg/mL in DMF).[12]
- Biotinylation buffer (100 mM Tris pH 7.4, 10 mM EDTA).[12]
- Chloroform/isoamyl alcohol (24:1).
- Streptavidin magnetic beads.
- Wash buffer (e.g., 100 mM Tris pH 7.5, 10 mM EDTA, 1 M NaCl, 0.1% Tween-20).[14]
- Elution buffer (100 mM DTT).[12]

Procedure:

- Metabolic Labeling:
  - Add 4sU to the cell culture medium to a final concentration of 100-500 µM and incubate for the desired labeling period (e.g., 1-4 hours).

© 2026 BenchChem. All rights reserved.

- RNA Extraction:
  - Harvest the cells and extract total RNA using TRIzol according to the manufacturer's instructions.
- Biotinylation of 4sU-labeled RNA:
  - In a 250 µL reaction volume, combine 20-100 µg of total RNA, 5 µL of **MTSEA-biotin**-XX stock solution, and 25 µL of 10x Biotinylation buffer.[12]
  - Incubate for 30 minutes at room temperature with rotation.[12]
  - Purify the RNA by chloroform/isoamyl alcohol extraction and isopropanol precipitation.[12]
- Enrichment of Biotinylated RNA:
  - Resuspend the biotinylated RNA in a suitable buffer and incubate with pre-washed streptavidin magnetic beads for 15-30 minutes at room temperature.[14]
  - Wash the beads extensively with wash buffer to remove non-biotinylated RNA.
- Elution:
  - Elute the nascent RNA from the beads by incubating with elution buffer (100 mM DTT) for 5-10 minutes.[12]
  - Collect the supernatant containing the enriched nascent RNA. The RNA is now ready for downstream applications such as qRT-PCR or RNA sequencing.

Visualizations

Signaling Pathway and Experimental Workflows

© 2026 BenchChem. All rights reserved.

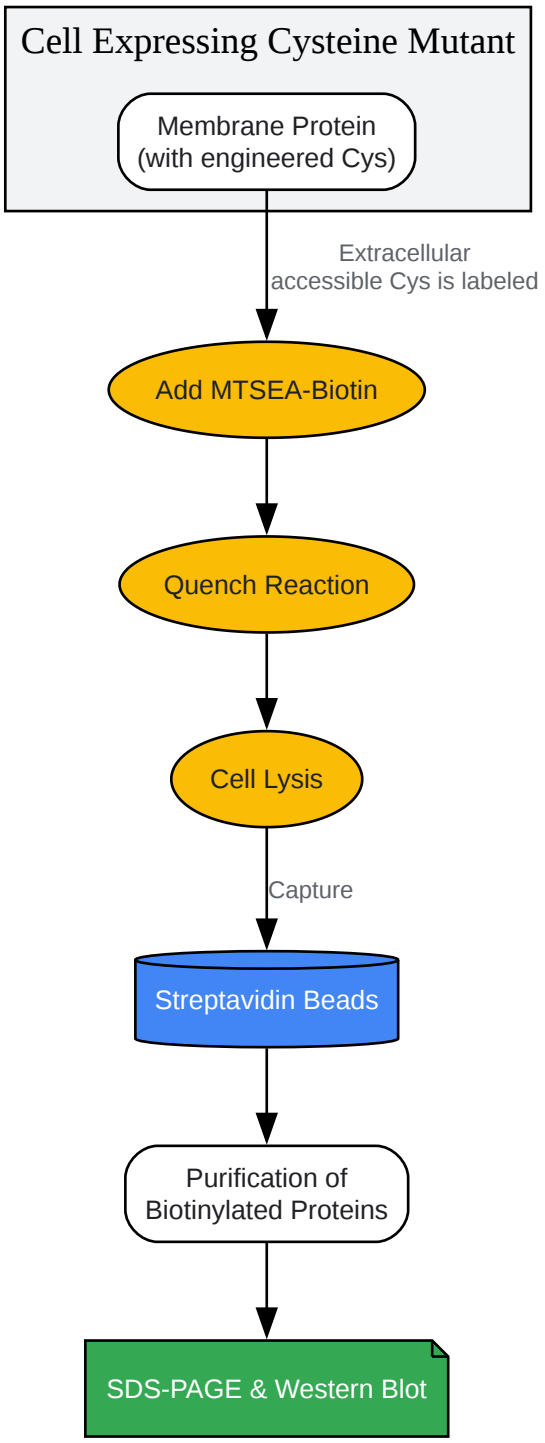

Click to download full resolution via product page

Caption: Workflow for the Substituted Cysteine Accessibility Method (SCAM).

© 2026 BenchChem. All rights reserved.

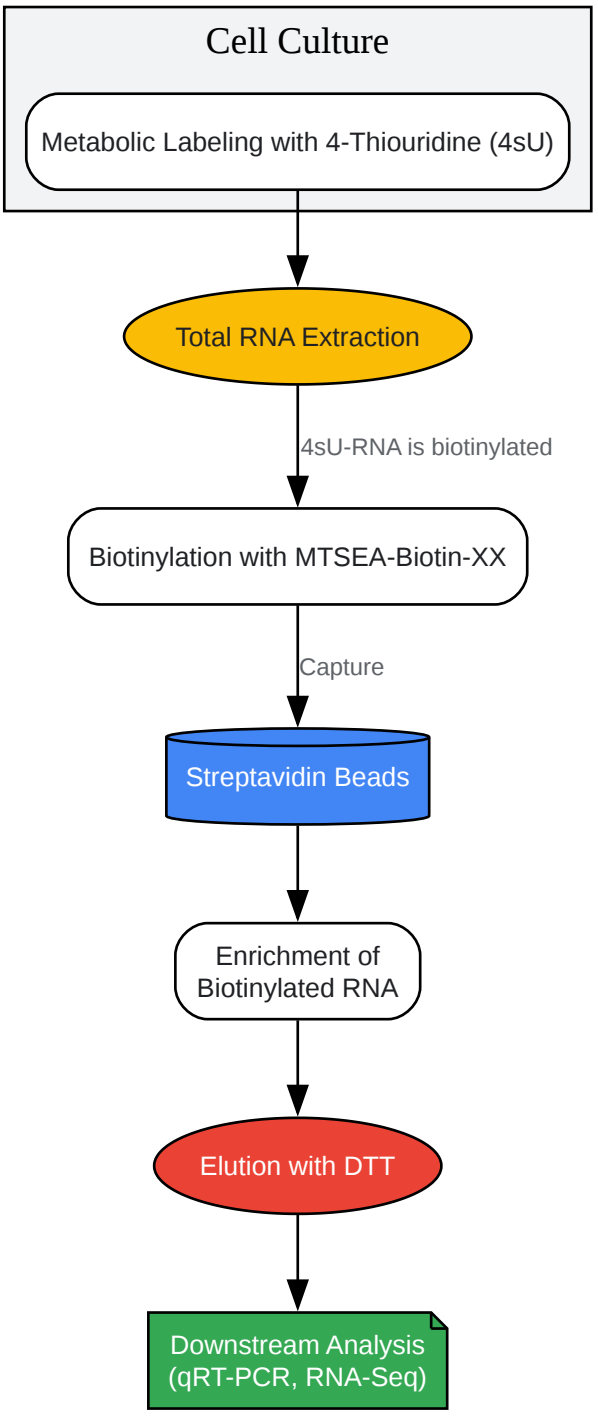

Click to download full resolution via product page

Caption: Workflow for Nascent RNA Labeling and Enrichment.

© 2026 BenchChem. All rights reserved.

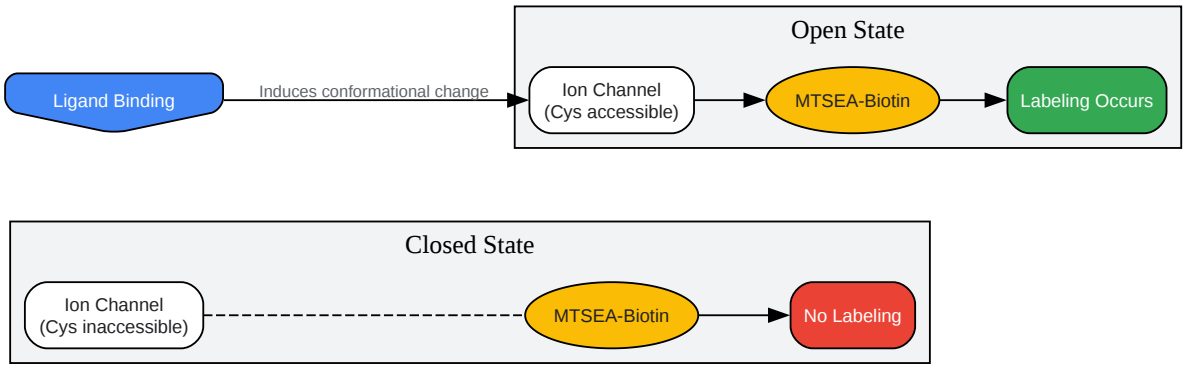

Click to download full resolution via product page

Caption: Probing Ion Channel Gating with **MTSEA-Biotin**.

Need Custom Synthesis?

BenchChem offers custom synthesis for rare earth carbides and specific isotopiclabeling.

Email: info@benchchem.com or Request Quote Online.

References

- 1. biotium.com [biotium.com]
- 2. en.bio-protocol.org [en.bio-protocol.org]
- 3. Cysteine Substitution Mutants Give Structural Insight and Identify ATP Binding and Activation Sites at P2X Receptors - PMC [pmc.ncbi.nlm.nih.gov]
- 4. benchchem.com [benchchem.com]
- 5. Quantitative reactivity profiling predicts functional cysteines in proteomes - PMC [pmc.ncbi.nlm.nih.gov]
- 6. Overview of Protein Labeling | Thermo Fisher Scientific - US [thermofisher.com]
- 7. The substituted-cysteine accessibility method (SCAM) to elucidate membrane protein structure - PubMed [pubmed.ncbi.nlm.nih.gov]

© 2026 BenchChem. All rights reserved.

- 8. Structural Analysis of Target Protein by Substituted Cysteine Accessibility Method - PMC [pmc.ncbi.nlm.nih.gov]
- 9. researchgate.net [researchgate.net]
- 10. bio-protocol.org [bio-protocol.org]
- 11. researchgate.net [researchgate.net]
- 12. researchgate.net [researchgate.net]
- 13. researchgate.net [researchgate.net]
- 14. Rapid and Scalable Profiling of Nascent RNA with fastGRO - PMC [pmc.ncbi.nlm.nih.gov]
- 15. researchgate.net [researchgate.net]
- 16. researchgate.net [researchgate.net]

- To cite this document: BenchChem. [Applications of MTSEA-Biotin in Research: A Technical Guide]. BenchChem, [2026]. [Online PDF]. Available at: [https://www.benchchem.com/product/b8018010/docs#applications-of-mtsea-biotin-in-research-a-technical-guide]

Disclaimer & Data Validity:

The information provided in this document is for Research Use Only (RUO) and is strictly not intended for diagnostic or therapeutic procedures. While BenchChem strives to provide accurate protocols, we make no warranties, express or implied, regarding the fitness of this product for every specific experimental setup.

Technical Support: The protocols provided are for reference purposes. Unsure if this reagent suits your experiment?

Need Industrial/Bulk Grade? Request Custom Synthesis Quote

© 2026 BenchChem. All rights reserved.

BenchChem

Our mission is to be the trusted global source of essential and advanced chemicals, empowering scientists and researchers to drive progress in science and industry.

Contact

Address: 3281 E Guasti Rd

Ontario, CA 91761, United States

Phone: (601) 213-4426

Email: info@benchchem.com

Contact our Ph.D. Support Team for a compatibility check

© 2026 BenchChem. All rights reserved.