Application Note: Strategic Synthesis of 2-Methyldecanoic Acid

Author: BenchChem Technical Support Team. **Date**: February 2026

Compound of Interest		
Compound Name:	*2-Methyldecanoic acid*	
CAS No.:	*137765-21-0*	
Cat. No.:	*B7824040*	*Get Quote*

Executive Summary

2-Methyldecanoic acid (CAS: 24323-23-7) is a branched-chain fatty acid critical in lipid metabolism research, pheromone signaling studies, and as a hydrophobic building block in drug delivery systems. Its synthesis presents a classic dichotomy in organic chemistry: the need for cost-effective bulk material (racemic) versus the requirement for high stereochemical purity (enantioselective) in biological assays.

This guide provides two validated protocols:

- Method A (Racemic): A robust, scalable Malonic Ester synthesis for generating bulk material.
- Method B (Asymmetric): An Evans Auxiliary approach for synthesizing high-purity enantiomers (>98% ee) required for receptor-binding studies.

Chemical Profile & Properties[1][2][3][4][5][6][7][8][9][10]

© 2026 BenchChem. All rights reserved.

Property	Specification
IUPAC Name	2-Methyldecanoic acid
CAS Number	24323-23-7
Molecular Formula	$C_{11}H_{22}O_2$
Molecular Weight	186.29 g/mol
Physical State	Colorless liquid / Low-melting solid
Boiling Point	~289°C (760 mmHg) / ~154°C (15 mmHg)
LogP	~4.5 (High Lipophilicity)
Solubility	Soluble in EtOH, Et_2O, $CHCl_3$; Insoluble in water

Synthesis Strategy Selection

The choice of method depends entirely on the downstream application. Use the decision matrix below to select the appropriate protocol.

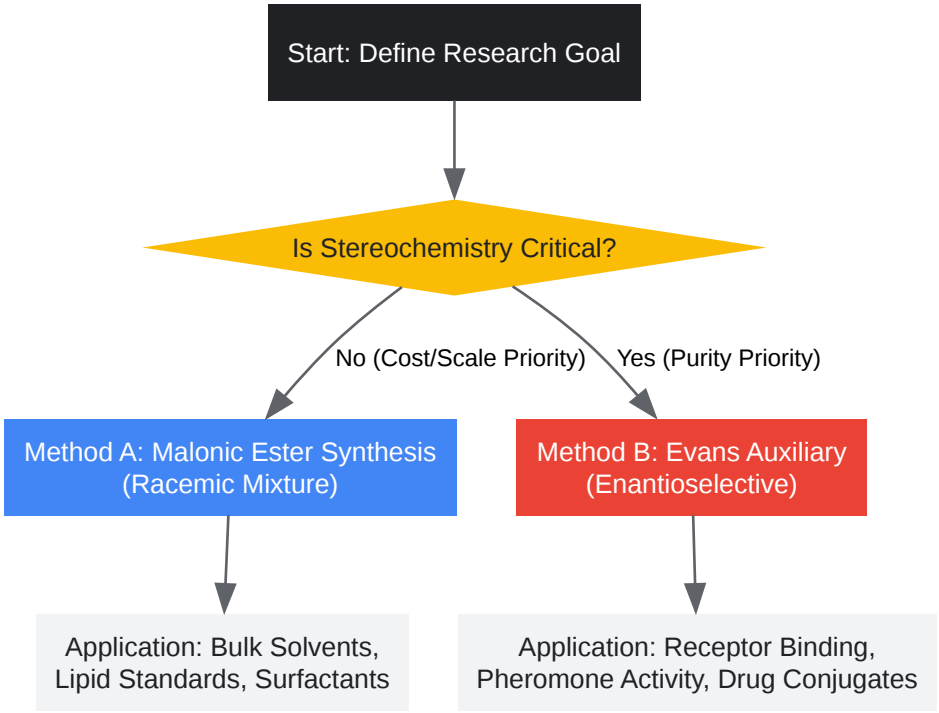

© 2026 BenchChem. All rights reserved.

Click to download full resolution via product page

Figure 1: Decision matrix for selecting the synthesis route based on experimental requirements.

Method A: Classical Malonic Ester Synthesis (Racemic)

Objective: Synthesis of (±)-**2-methyldecanoic acid** on a multigram scale. Mechanism: Double alkylation of diethyl malonate followed by hydrolysis and thermal decarboxylation.

Reagents

- Diethyl malonate (1.0 eq)
- 1-Bromooctane (1.05 eq)
- Methyl Iodide (1.1 eq)
- Sodium Ethoxide (NaOEt) (2.2 eq total, prepared in situ)
- Ethanol (anhydrous)
- KOH / H_2O (for hydrolysis)

Protocol

Step 1: Introduction of the C8 Chain

- Setup: Flame-dry a 500 mL 3-neck round-bottom flask (RBF) equipped with a reflux condenser and addition funnel under N_2 atmosphere.
- Base Preparation: Dissolve Na metal (1.1 eq) in anhydrous ethanol to generate NaOEt.
- Enolization: Add diethyl malonate (1.0 eq) dropwise at room temperature. Stir for 30 min to form the sodiomalonate enolate.
- Alkylation 1: Add 1-bromooctane (1.05 eq) dropwise. Heat to reflux for 4-6 hours.
    - Checkpoint: Monitor by TLC (Hexane/EtOAc 9:1). Disappearance of diethyl malonate indicates completion.

© 2026 BenchChem. All rights reserved.

- Workup: Remove EtOH under reduced pressure. Partition residue between water and diethyl ether. Dry organic layer ($MgSO_4$) and concentrate to yield Diethyl octylmalonate.[1]

Step 2: Methylation (The Branching Step)

- Enolization: In a fresh flask, prepare NaOEt (1.1 eq) in EtOH. Add the crude Diethyl octylmalonate.
- Alkylation 2: Cool to 0°C. Add Methyl Iodide (MeI) (1.2 eq) slowly (exothermic). Allow to warm to RT and reflux for 2 hours.
  - Note: MeI is highly reactive; this step is faster than the octyl addition.
- Workup: Standard aqueous extraction as above to yield Diethyl methyl(octyl)malonate.

Step 3: Hydrolysis & Decarboxylation

- Saponification: Reflux the diester with 40% aqueous KOH (excess) and ethanol (1:1 v/v) for 4 hours.
- Acidification: Cool and acidify with conc. HCl to pH 1. The dicarboxylic acid will precipitate or oil out. Extract with ether.
- Decarboxylation: Heat the crude dicarboxylic acid neat (no solvent) to 160-180°C in an oil bath. CO_2 evolution will be vigorous. Maintain temperature until bubbling ceases (~2 hours).
- Purification: Vacuum distillation (approx. 150-160°C @ 10 mmHg) yields pure (±)-**2-methyldecanoic acid**.

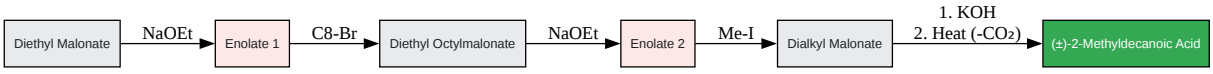

Click to download full resolution via product page

Figure 2: Stepwise alkylation pathway for the Malonic Ester synthesis.

© 2026 BenchChem. All rights reserved.

Method B: Asymmetric Evans Alkylation (Enantioselective)

Objective: Synthesis of (S)-**2-methyldecanoic acid** (>98% ee). Mechanism: Stereoselective alkylation of a chiral

-acyloxazolidinone enolate via a Zimmerman-Traxler transition state.

Reagents

- (S)-4-Benzyl-3-propionyl-2-oxazolidinone (Starting Auxiliary)
- Sodium bis(trimethylsilyl)amide (NaHMDS) (1.1 eq, 1M in THF)[1]
- 1-Iodooctane (1.5 eq) (Note: Iodides are more reactive than bromides at low temp)
- Lithium Hydroxide / Hydrogen Peroxide (for cleavage)
- THF (anhydrous)[1]

Protocol

Step 1: Enolate Formation & Alkylation[2][3][4]

- Cooling: Dissolve the Propionyl-Oxazolidinone (1.0 eq) in anhydrous THF under Argon. Cool to -78°C (Dry ice/Acetone bath).
- Deprotonation: Add NaHMDS (1.1 eq) dropwise over 10 mins. Stir for 30 mins at -78°C to ensure complete formation of the (Z)-enolate.
  - Mechanism:[5][6][4][7][8][9] The lithium cation chelates between the enolate oxygen and the oxazolidinone carbonyl oxygen.
- Alkylation: Add 1-Iodooctane (1.5 eq) dropwise.
  - Critical Step: Stir at -78°C for 2 hours, then slowly warm to 0°C over 2 hours. The bulky benzyl group at C4 blocks one face, forcing the octyl group to attack from the opposite side.

© 2026 BenchChem. All rights reserved.

- Quench: Add saturated NH_4Cl solution. Extract with EtOAc.[3][1][7]
- Purification: Flash chromatography (Silica, Hexane/EtOAc 9:1). This separates the diastereomers (though dr is usually >95:5).

Step 2: Chiral Auxiliary Cleavage

- Reaction: Dissolve the alkylated imide in THF/H_2O (3:1). Cool to 0°C.[3]
- Perhydrolysis: Add 30% H_2O_2 (4 eq) followed by LiOH (2 eq). Stir at 0°C for 1 hour.
  - Why H_2O_2? The hydroperoxide anion is more nucleophilic than hydroxide, attacking the exocyclic carbonyl to cleave the auxiliary without racemizing the

    -center.
- Recovery: Quench with Na_2SO_3 (to destroy peroxide). Acidify to pH 2. Extract the acid with EtOAc.[3] The chiral auxiliary can be recovered from the organic phase for reuse.

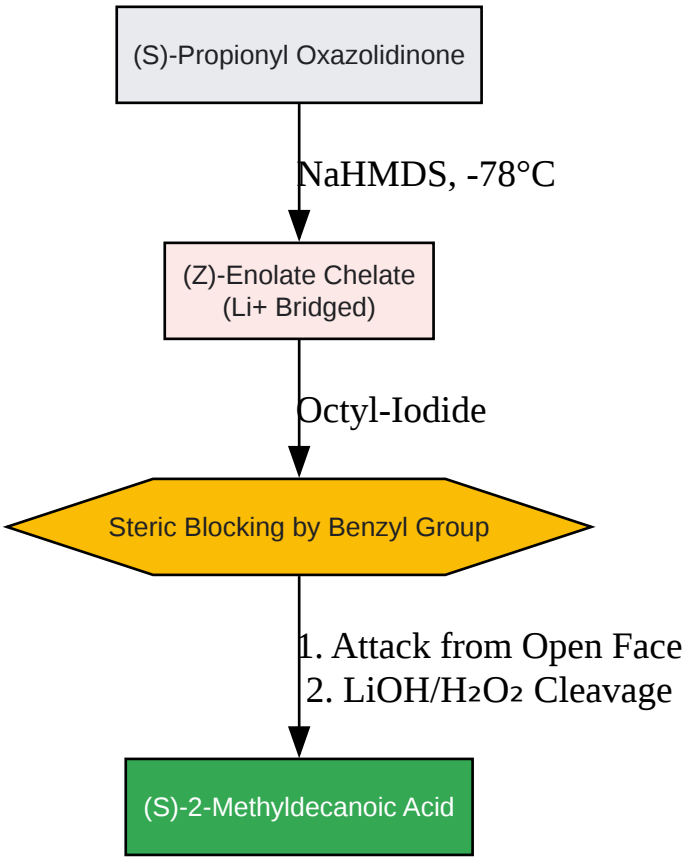

© 2026 BenchChem. All rights reserved.

Click to download full resolution via product page

Figure 3: Stereochemical control mechanism using the Evans Auxiliary.

Analytical Validation

To ensure the identity and purity of the synthesized compound, the following analytical parameters should be verified.

Method	Expected Signal / Observation
^{1}H NMR ($CDCl_3$)	11.0-12.0 (br s, 1H, -COOH) 2.45 (m, 1H, -CH) 1.15 (d, 3H, -CH_3) 0.88 (t, 3H, terminal CH_3)
GC-MS (EI)	Molecular Ion: m/z 186 McLafferty Rearrangement: m/z 74 (Characteristic of methyl esters if derivatized) or m/z 88 for the acid form (less common, usually derivatize to FAME for GC).
Chiral HPLC	Required for Method B. Use Chiralcel OD-H or AD-H column. Compare against racemic standard from Method A.

Safety & Hazards

- Methyl Iodide / Octyl Iodide: Alkylating agents. Suspected carcinogens. Use in a fume hood.
- NaHMDS / NaH: Pyrophoric/Water-reactive. Handle under inert atmosphere.
- **2-Methyldecanoic Acid**: Irritant to eyes and skin (H315, H319).

© 2026 BenchChem. All rights reserved.

References

- PubChem. (n.d.).[10][11] **2-Methyldecanoic acid** (Compound).[10][11][12] National Library of Medicine. Retrieved January 31, 2026, from [Link]
- Evans, D. A., et al. (1982). Enantioselective alkylation of chiral enolates.[5] Journal of the American Chemical Society. (Seminal work on Evans Auxiliary).[3] [Link]
- Master Organic Chemistry. (2025). The Malonic Ester Synthesis.[6][4][8][Link]
- Williams College. (2008). Acylation, Diastereoselective Alkylation, and Cleavage of an Oxazolidinone Chiral Auxiliary.[5][3] Journal of Chemical Education. [Link]

Need Custom Synthesis?

BenchChem offers custom synthesis for rare earth carbides and specific isotopiclabeling.

Email: info@benchchem.com or Request Quote Online.

Sources

- 1. MSciprac2 [bristol.ac.uk]
- 2. pdf.benchchem.com [pdf.benchchem.com]
- 3. chemistry.williams.edu [chemistry.williams.edu]
- 4. masterorganicchemistry.com [masterorganicchemistry.com]
- 5. uwindsor.ca [uwindsor.ca]
- 6. Synthesis of Amino Acids: Acetamidomalonic Ester Synthesis Explained: Definition, Examples, Practice & Video Lessons [pearson.com]
- 7. chem.libretexts.org [chem.libretexts.org]
- 8. m.youtube.com [m.youtube.com]
- 9. CN103539655A - Synthesis method of 2-methyl-2-pentenoic acid - Google Patents [patents.google.com]
- 10. Decanoic acid, 2-methyl- | C11H22O2 | CID 91167 - PubChem [pubchem.ncbi.nlm.nih.gov]

© 2026 BenchChem. All rights reserved.

- 11. 2-Methyldodecanoic acid | C13H26O2 | CID 102893 - PubChem [pubchem.ncbi.nlm.nih.gov]
- 12. 2-methyl decanoic acid, 24323-23-7 [thegoodscentscompany.com]
- To cite this document: BenchChem. [Application Note: Strategic Synthesis of 2-Methyldecanoic Acid]. BenchChem, [2026]. [Online PDF]. Available at: [https://www.benchchem.com/product/b7824040#synthesis-of-2-methyldecanoic-acid-for-research-purposes]

Disclaimer & Data Validity:

The information provided in this document is for Research Use Only (RUO) and is strictly not intended for diagnostic or therapeutic procedures. While BenchChem strives to provide accurate protocols, we make no warranties, express or implied, regarding the fitness of this product for every specific experimental setup.

Technical Support: The protocols provided are for reference purposes. Unsure if this reagent suits your experiment? [Contact our Ph.D. Support Team for a compatibility check]

Need Industrial/Bulk Grade? Request Custom Synthesis Quote

BenchChem

Our mission is to be the trusted global source of essential and advanced chemicals, empowering scientists and researchers to drive progress in science and industry.

Contact

Address: 3281 E Guasti Rd

Ontario, CA 91761, United States

Phone: (601) 213-4426

Email: info@benchchem.com

© 2026 BenchChem. All rights reserved.