A Comparative Guide to the Kinetic Studies of Vinyl Bromide Polymerization

Author: BenchChem Technical Support Team. **Date**: April 2026

Compound of Interest

Compound Name:	*Vinyl bromide*
CAS No.:	*25951-54-6*
Cat. No.:	*B7801696*

Get Quote

For Researchers, Scientists, and Drug Development Professionals

This guide provides a comparative overview of the kinetic studies of **vinyl bromide** polymerization. Due to the limited availability of specific kinetic data for **vinyl bromide** in publicly accessible literature, this guide leverages data from its close structural analog, vinyl chloride, to provide a comparative framework. Vinyl halides, including vinyl chloride and **vinyl bromide**, primarily undergo free-radical polymerization, making the kinetic behavior of vinyl chloride a relevant and valuable reference point for understanding the polymerization of **vinyl bromide**.[1]

Comparison of Polymerization Kinetics: Vinyl Chloride as a Reference

Quantitative kinetic data for the free-radical polymerization of vinyl chloride are summarized below. These values provide an estimate of the reaction rates and activation energies that can be expected in similar vinyl halide polymerizations.

© 2026 BenchChem. All rights reserved.

Kinetic Parameter	Value	Monomer	Solvent	Initiator	Temperature (°C)	Citation
Rate of Polymerization (Rp)	10–15Rp= 3.63 [I]0.56[M]1.23 exp (–101,500/RT)	Vinyl Chloride	Chlorobenzene	Azoisobutyronitrile	30 - 45	[2]
Overall Activation Energy (Ea)	101.5 kJ/mol	Vinyl Chloride	Chlorobenzene	Azoisobutyronitrile	30 - 45	[2]
Transfer Constant to Monomer (CM)	1.9 × 10–3	Vinyl Chloride	Chlorobenzene	Azoisobutyronitrile	30 - 45	[2]
Termination Rate Constant (kt) in polymer-rich phase	2.36 × 108 L mol−1 s−1	Vinyl Chloride	Bulk	Not Specified	Not Specified	[3]

Experimental Protocols

A detailed experimental protocol for studying the kinetics of free-radical polymerization of a vinyl halide, adaptable for **vinyl bromide**, is provided below. This protocol is based on the dilatometric method used for vinyl chloride polymerization.[2]

Objective: To determine the rate of polymerization of **vinyl bromide** by measuring the volume contraction of the reaction mixture over time.

Materials:

© 2026 BenchChem. All rights reserved.

- **Vinyl bromide** (monomer), purified by distillation to remove inhibitors.
- A suitable solvent (e.g., chlorobenzene), freshly distilled.
- A free-radical initiator (e.g., 2,2'-azobisisobutyronitrile, AIBN), recrystallized.
- Dilatometer with a calibrated capillary tube.
- Constant temperature water bath.
- Vacuum line.
- Nitrogen gas supply.

Procedure:

- Preparation of the Reaction Mixture:
  - A known concentration of the initiator (e.g., 0.005 to 0.1 M) is dissolved in the solvent.
  - A known concentration of the **vinyl bromide** monomer (e.g., 1.0 to 8.0 M) is added to the initiator solution.
  - The total volume of the solution is recorded.
- Filling the Dilatometer:
  - The dilatometer is thoroughly cleaned and dried.
  - The reaction mixture is introduced into the dilatometer bulb.
  - The contents are degassed by several freeze-pump-thaw cycles on a vacuum line to remove dissolved oxygen, which can inhibit polymerization.
  - The dilatometer is then filled with purified nitrogen and sealed.
- Kinetic Measurement:

© 2026 BenchChem. All rights reserved.

- The dilatometer is placed in a constant temperature water bath set to the desired reaction temperature (e.g., 30-45 °C).
- The initial height of the meniscus in the capillary tube is recorded once thermal equilibrium is reached.
- The height of the meniscus is recorded at regular time intervals. The decrease in height corresponds to the volume contraction due to the conversion of monomer to the denser polymer.

- Data Analysis:
  - The rate of polymerization (Rp) is calculated from the rate of change of the meniscus height, the known geometry of the dilatometer, and the densities of the monomer and polymer.
  - By performing experiments at different monomer and initiator concentrations, the orders of reaction with respect to each can be determined.
  - By conducting the experiment at various temperatures, the overall activation energy (Ea) can be calculated using the Arrhenius equation.

Visualizations

Signaling Pathways and Logical Relationships

The following diagrams illustrate the fundamental mechanism of free-radical polymerization and a typical experimental workflow for kinetic studies.

© 2026 BenchChem. All rights reserved.

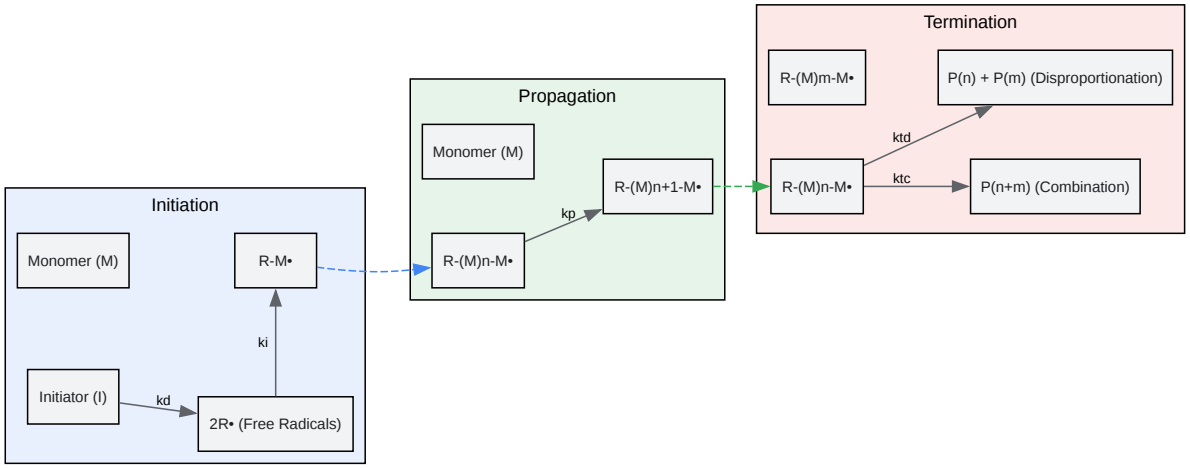

Click to download full resolution via product page

Caption: Free-radical polymerization mechanism.

© 2026 BenchChem. All rights reserved.

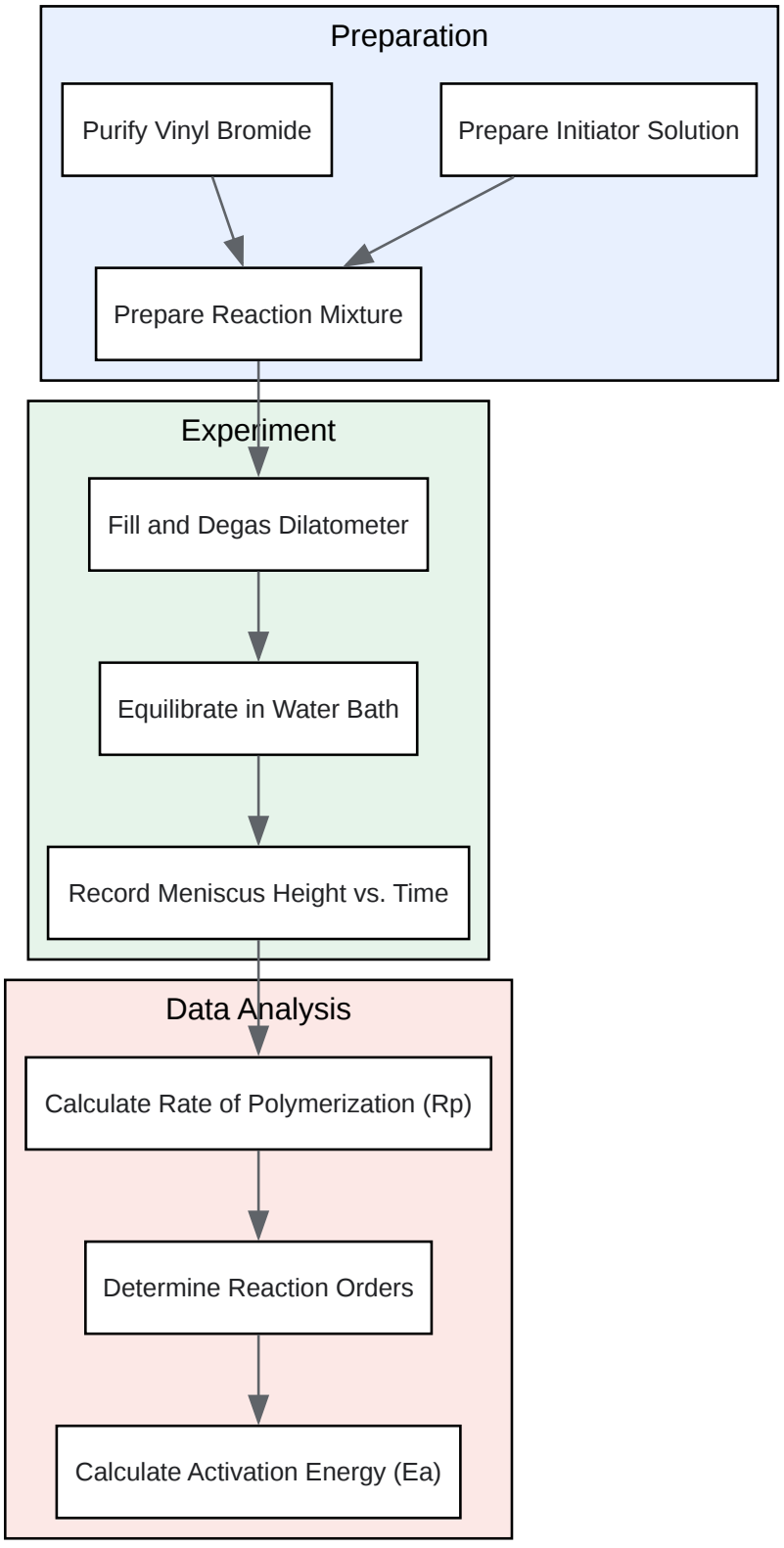

Click to download full resolution via product page

Caption: Experimental workflow for kinetic studies.

© 2026 BenchChem. All rights reserved.

Need Custom Synthesis?

BenchChem offers custom synthesis for rare earth carbides and specific isotopiclabeling.

Email: info@benchchem.com or Request Quote Online.

References

- 1. yunus.hacettepe.edu.tr [yunus.hacettepe.edu.tr]
- 2. Vinyl chloride studies. Part 1.—Kinetics of polymerization of vinyl chloride in chlorobenzene solution - Transactions of the Faraday Society (RSC Publishing) [pubs.rsc.org]
- 3. researchgate.net [researchgate.net]
- To cite this document: BenchChem. [A Comparative Guide to the Kinetic Studies of Vinyl Bromide Polymerization]. BenchChem, [2026]. [Online PDF]. Available at: [https://www.benchchem.com/product/b7801696/docs#a-comparative-guide-to-the-kinetic-studies-of-vinyl-bromide-polymerization]

Disclaimer & Data Validity:

The information provided in this document is for Research Use Only (RUO) and is strictly not intended for diagnostic or therapeutic procedures. While BenchChem strives to provide accurate protocols, we make no warranties, express or implied, regarding the fitness of this product for every specific experimental setup.

Technical Support: The protocols provided are for reference purposes. Unsure if this reagent suits your experiment?

Need Industrial/Bulk Grade? Request Custom Synthesis Quote

© 2026 BenchChem. All rights reserved.

BenchChem

Our mission is to be the trusted global source of essential and advanced chemicals, empowering scientists and researchers to drive progress in science and industry.

Contact

Address: 3281 E Guasti Rd

Ontario, CA 91761, United States

Phone: (601) 213-4426

Email: info@benchchem.com

Contact our Ph.D. Support Team for a compatibility check

© 2026 BenchChem. All rights reserved.