Application Notes and Protocols for Cycloaddition Reactions Involving Methyl 2-undecynoate

Author: BenchChem Technical Support Team. **Date**: May 2026

Compound of Interest

Compound Name:	*Methyl 2-undecynoate*
CAS No.:	*10522-18-6*
Cat. No.:	*B078527*

Get Quote

Introduction: The Versatility of **Methyl 2-undecynoate** in Cycloaddition Chemistry

Methyl 2-undecynoate is a valuable and versatile substrate in the field of organic synthesis, particularly in the construction of complex cyclic and heterocyclic scaffolds. Its chemical structure, characterized by an internal alkyne conjugated to an electron-withdrawing methyl ester group, defines its reactivity. This electronic deficiency polarizes the triple bond, rendering it an excellent electrophile for a variety of pericyclic reactions. Consequently, it serves as a potent dienophile in [4+2] Diels-Alder reactions and a dipolarophile in [3+2] cycloadditions.

The long C_8H_{17} alkyl chain imparts significant lipophilicity to the molecule, influencing its solubility and sometimes introducing steric factors that can modulate reaction kinetics and selectivity. These application notes provide a detailed guide for researchers, scientists, and drug development professionals on leveraging **methyl 2-undecynoate** in key cycloaddition reactions. The protocols described herein are based on established methodologies for

© 2026 BenchChem. All rights reserved.

analogous substrates and are designed to serve as robust starting points for experimental investigation.

Section 1: [4+2] Diels-Alder Cycloaddition

The Diels-Alder reaction is a cornerstone of organic synthesis, enabling the stereospecific formation of a six-membered ring from a conjugated diene and a dienophile.[1] As an electron-poor alkyne, **methyl 2-undecynoate** is a highly effective dienophile, readily reacting with electron-rich dienes to form substituted cyclohexadiene derivatives.

Mechanistic Considerations & Regioselectivity

The reaction proceeds via a concerted [π4s + π2s] cycloaddition mechanism.[1] For unsymmetrical dienes, the regioselectivity of the addition is governed by the alignment of frontier molecular orbitals (FMO). Generally, the reaction favors the isomer where the carbon atoms with the largest HOMO coefficient (on the diene) and the largest LUMO coefficient (on the dienophile) align.[2][3] For **methyl 2-undecynoate**, the carbon atom beta to the carbonyl group (C-3) is the most electrophilic. When reacting with a 1-substituted diene (e.g., 1-methoxy-1,3-butadiene), the major product is typically the "ortho" regioisomer.

Lewis Acid Catalysis: The reaction rate can be dramatically enhanced by the use of a Lewis acid (e.g., $AlCl_3$, $BF_3{\cdot}OEt_2$). The Lewis acid coordinates to the carbonyl oxygen of the ester, further lowering the energy of the dienophile's LUMO and increasing its electrophilicity. This not only accelerates the reaction but can also improve regioselectivity.[4][5]

© 2026 BenchChem. All rights reserved.

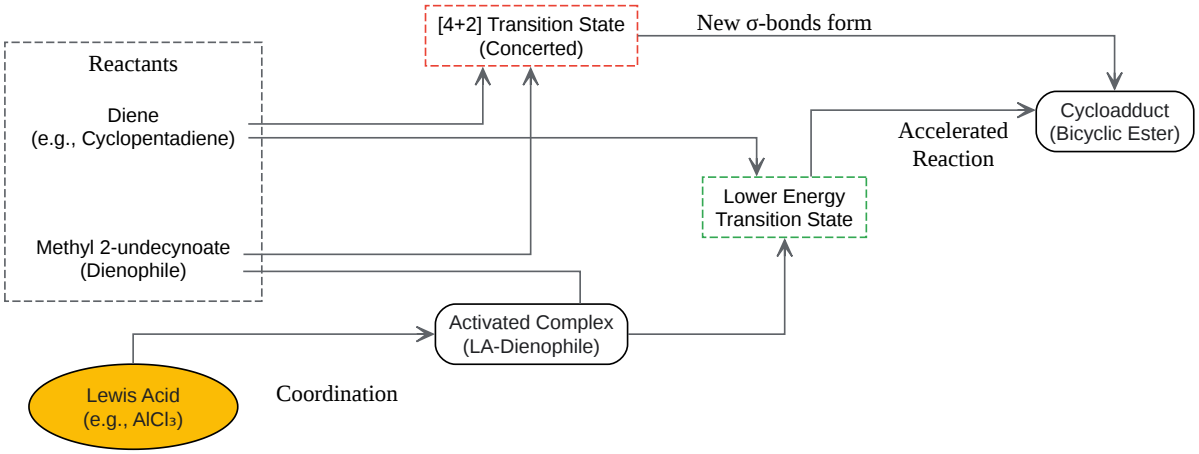

Click to download full resolution via product page

Figure 1: Diels-Alder reaction pathway, uncatalyzed vs. Lewis acid catalyzed.

Representative Protocol: Diels-Alder Reaction with Cyclopentadiene

This protocol describes the reaction between **methyl 2-undecynoate** and freshly cracked cyclopentadiene. Cyclopentadiene must be prepared immediately before use by cracking its dimer.[6]

Materials:

- **Methyl 2-undecynoate** (MW: 196.29 g/mol)
- Dicyclopentadiene
- Toluene, anhydrous
- Aluminum chloride ($AlCl_3$), anhydrous
- Dichloromethane (DCM)

© 2026 BenchChem. All rights reserved.

- Saturated sodium bicarbonate solution ($NaHCO_3$)
- Brine (saturated NaCl solution)
- Anhydrous magnesium sulfate ($MgSO_4$)
- Silica gel for column chromatography

Procedure:

- Preparation of Cyclopentadiene: Set up a fractional distillation apparatus. Gently heat dicyclopentadiene to ~170 °C to induce retro-Diels-Alder cracking. Collect the cyclopentadiene monomer (b.p. 41 °C) in a receiving flask cooled in an ice bath. Use immediately.[6]
- Reaction Setup: To a flame-dried 100 mL round-bottom flask under a nitrogen atmosphere, add anhydrous toluene (30 mL) and **methyl 2-undecynoate** (1.96 g, 10.0 mmol).
- Cool the solution to 0 °C in an ice bath.
- Catalyzed Reaction: Slowly add anhydrous aluminum chloride (1.47 g, 11.0 mmol, 1.1 eq) in portions. Stir for 15 minutes at 0 °C.
- Slowly add freshly prepared cyclopentadiene (0.99 g, ~1.2 mL, 15.0 mmol, 1.5 eq) dropwise to the reaction mixture.
- Reaction Monitoring: Allow the reaction to stir at 0 °C for 1 hour, then warm to room temperature. Monitor the reaction progress by TLC (e.g., using 9:1 Hexanes:Ethyl Acetate) until the **methyl 2-undecynoate** spot has disappeared (typically 2-4 hours).
- Workup: Carefully quench the reaction by slowly adding 20 mL of cold water. Transfer the mixture to a separatory funnel and extract with dichloromethane (3 x 30 mL).
- Combine the organic layers and wash sequentially with saturated $NaHCO_3$ solution (1 x 30 mL) and brine (1 x 30 mL).
- Dry the organic layer over anhydrous $MgSO_4$, filter, and concentrate under reduced pressure.

© 2026 BenchChem. All rights reserved.

- Purification: Purify the crude product by silica gel column chromatography to yield the bicyclic adduct.

Parameter	Condition	Rationale / Notes
Diene	Cyclopentadiene (freshly cracked)	Dimerizes at room temperature; must be freshly prepared.[6]
Dienophile	Methyl 2-undecynoate	Electron-deficient alkyne.
Catalyst	Aluminum Chloride ($AlCl_3$)	Lewis acid activates the dienophile, increasing reaction rate.[4]
Solvent	Toluene, anhydrous	Anhydrous conditions are crucial to prevent quenching the Lewis acid.
Temperature	0 °C to Room Temperature	Low initial temperature controls the exothermic reaction.
Stoichiometry	1.5 eq. Diene, 1.1 eq. Catalyst	Excess diene drives the reaction to completion.
Expected Product	Methyl 2-(nonan-2-yl)bicyclo[2.2.1]hepta-2,5-diene-2-carboxylate	The endo product is often kinetically favored.

Section 2: [3+2] Huisgen Azide-Alkyne Cycloaddition (Click Chemistry)

The 1,3-dipolar cycloaddition between an azide and an alkyne to form a 1,2,3-triazole is a powerful reaction, famously adapted by Sharpless and Meldal into a "click" reaction.[7] The copper(I)-catalyzed azide-alkyne cycloaddition (CuAAC) is highly efficient, regioselective for terminal alkynes, and tolerates a wide range of functional groups.[8] For internal alkynes like **methyl 2-undecynoate**, the reaction is not regioselective (as the two nitrogen atoms of the azide add across two substituted carbons) but still benefits immensely from copper catalysis, proceeding much more rapidly than the thermal equivalent.

© 2026 BenchChem. All rights reserved.

Mechanistic Considerations

The uncatalyzed thermal reaction is a concerted pericyclic process that requires high temperatures and often yields a mixture of regioisomers with terminal alkynes. The Cu(I)-catalyzed mechanism is a stepwise process involving the formation of a copper-acetylide intermediate. This intermediate then reacts with the azide, leading exclusively to the 1,4-disubstituted triazole with terminal alkynes.[7][8] For an internal alkyne like **methyl 2-undecynoate**, the catalytic cycle still proceeds efficiently to yield a single, fully substituted triazole product.

© 2026 BenchChem. All rights reserved.

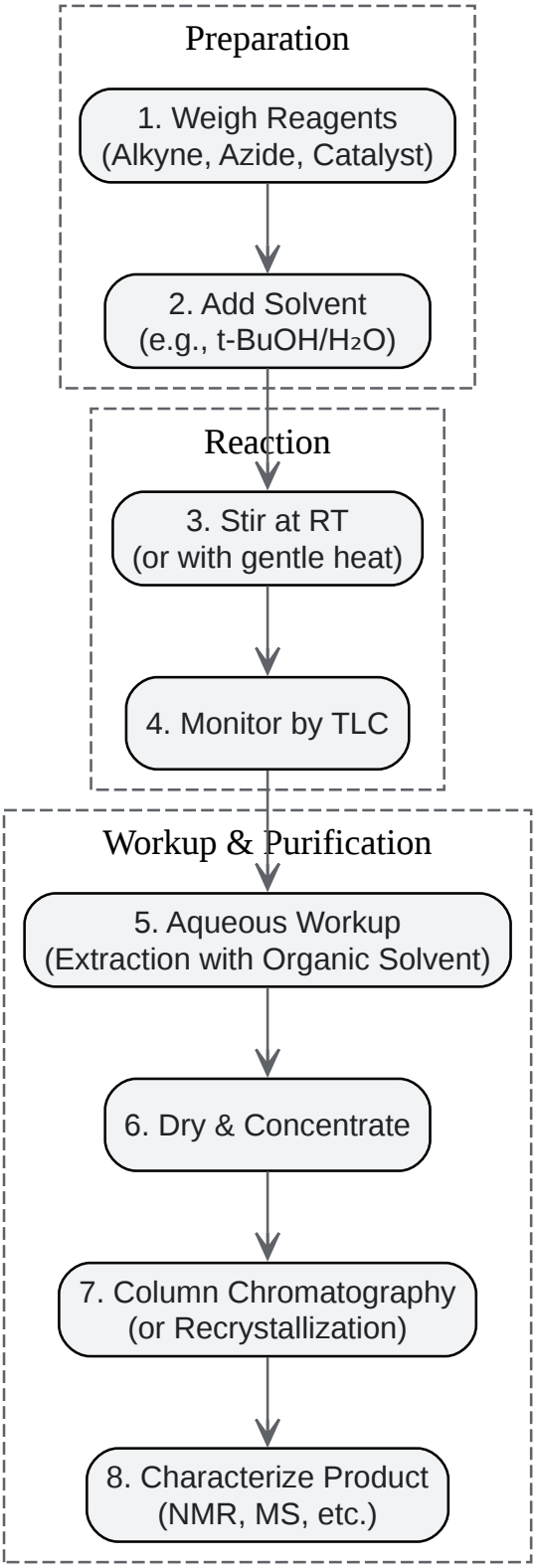

Click to download full resolution via product page

Figure 2: General experimental workflow for a CuAAC "Click" Reaction.

© 2026 BenchChem. All rights reserved.

Representative Protocol: CuAAC Reaction with Benzyl Azide

This protocol is adapted from standard procedures for CuAAC reactions.[9] Optimization of temperature may be required for the less reactive internal alkyne.

Materials:

- **Methyl 2-undecynoate** (MW: 196.29 g/mol)
- Benzyl azide (MW: 133.15 g/mol)
- Copper(II) sulfate pentahydrate ($CuSO_4 \cdot 5H_2O$)
- Sodium ascorbate
- tert-Butanol (t-BuOH)
- Deionized water
- Ethyl acetate

Procedure:

- Reaction Setup: In a 50 mL vial, dissolve **methyl 2-undecynoate** (0.98 g, 5.0 mmol) and benzyl azide (0.73 g, 5.5 mmol, 1.1 eq) in a 1:1 mixture of t-BuOH and water (20 mL).
- Catalyst Preparation: In a separate small vial, prepare fresh catalyst solutions. Dissolve copper(II) sulfate pentahydrate (62 mg, 0.25 mmol, 5 mol%) in 1 mL of water. In another vial, dissolve sodium ascorbate (99 mg, 0.50 mmol, 10 mol%) in 1 mL of water.
- Reaction Initiation: Add the sodium ascorbate solution to the main reaction mixture, followed by the copper sulfate solution. The solution should turn a yellow-orange color.
- Reaction Monitoring: Seal the vial and stir vigorously at room temperature. The reaction may require gentle heating (40-50 °C) to proceed at a reasonable rate with the internal alkyne. Monitor the reaction by TLC until the starting materials are consumed (typically 12-24 hours).

© 2026 BenchChem. All rights reserved.

- Workup: Once the reaction is complete, add 20 mL of water and transfer to a separatory funnel. Extract the product with ethyl acetate (3 x 30 mL).
- Combine the organic layers, wash with brine (1 x 30 mL), dry over anhydrous $MgSO_4$, filter, and concentrate under reduced pressure.
- Purification: The crude product can often be purified by recrystallization or by silica gel column chromatography.

Parameter	Condition	Rationale / Notes
Dipolarophile	Methyl 2-undecynoate	Internal alkyne; reaction may be slower than with terminal alkynes.
1,3-Dipole	Benzyl Azide	Common, stable azide. Can be purchased or prepared from benzyl bromide and sodium azide.
Catalyst System	$CuSO_4$ / Sodium Ascorbate	In situ generation of the active Cu(I) catalyst.[10]
Solvent	t-BuOH / H_2O (1:1)	Standard solvent system for CuAAC, accommodates both organic and inorganic reagents.
Temperature	Room Temperature to 50 °C	Internal alkynes often require mild heating to increase the reaction rate.
Expected Product	Methyl 1-benzyl-5-octyl-4-methyl-1H-1,2,3-triazole-5-carboxylate	A single, fully substituted triazole regioisomer.

Section 3: [3+2] Cycloaddition for Pyrazole Synthesis

© 2026 BenchChem. All rights reserved.

The reaction of alkynes with diazo compounds is a classical and highly effective method for synthesizing pyrazole rings, which are important scaffolds in medicinal chemistry.[11] **Methyl 2-undecynoate**, being an electron-deficient alkyne, reacts readily with nucleophilic diazoalkanes like diazomethane.

Mechanistic Considerations & Regioselectivity

This reaction is a type of 1,3-dipolar cycloaddition. The regioselectivity is determined by the FMO interactions between the diazomethane (HOMO) and the electron-deficient alkyne (LUMO). The LUMO of **methyl 2-undecynoate** has its largest coefficient on the carbon atom beta to the carbonyl (C-3). The HOMO of diazomethane has its largest coefficient on the carbon atom. Therefore, the primary bond formation occurs between these two atoms, leading to a specific regioisomer. The initial cycloadduct, a pyrazolenine, typically isomerizes to the more stable aromatic pyrazole.

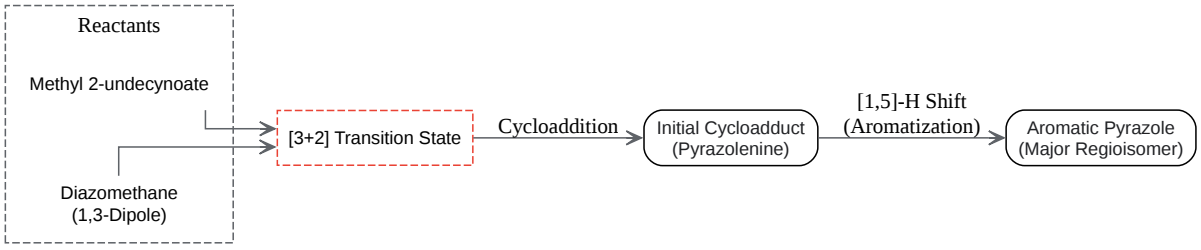

Click to download full resolution via product page

Figure 3: Reaction mechanism for pyrazole synthesis from an alkyne and diazomethane.

Representative Protocol: Reaction with Diazomethane

Safety Warning: Diazomethane is a toxic and explosive gas. This procedure should only be performed by trained personnel in a well-ventilated fume hood behind a blast shield. It is typically generated in situ from a stable precursor like Diazald™ and used immediately in an ethereal solution.

Materials:

© 2026 BenchChem. All rights reserved.

- **Methyl 2-undecynoate** (MW: 196.29 g/mol)
- Ethereal solution of diazomethane (concentration to be determined before use)
- Diethyl ether
- Acetic acid (glacial)

Procedure:

- Reaction Setup: In a 100 mL flask equipped with a magnetic stir bar, dissolve **methyl 2-undecynoate** (0.98 g, 5.0 mmol) in 25 mL of diethyl ether.
- Cool the flask to 0 °C in an ice bath.
- Addition of Diazomethane: Slowly add a freshly prepared ethereal solution of diazomethane dropwise to the stirred alkyne solution. A slight excess (e.g., 6.0 mmol, 1.2 eq) is typically used. The yellow color of diazomethane should dissipate as it reacts. If the color persists, the reaction is complete.
- Reaction Monitoring: Allow the mixture to stir at 0 °C for 1 hour and then warm to room temperature overnight. Monitor by TLC for the consumption of the starting alkyne.
- Quenching: After the reaction is complete, cool the flask back to 0 °C and carefully add glacial acetic acid dropwise to quench any excess diazomethane until the yellow color disappears and gas evolution ceases.
- Workup: Transfer the mixture to a separatory funnel and wash with saturated $NaHCO_3$ solution (2 x 20 mL) and brine (1 x 20 mL).
- Dry the organic layer over anhydrous $MgSO_4$, filter, and concentrate under reduced pressure.
- Purification: Purify the crude product by silica gel column chromatography to isolate the two pyrazole regioisomers.

© 2026 BenchChem. All rights reserved.

Parameter	Condition	Rationale / Notes
Dipolarophile	Methyl 2-undecynoate	Electron-deficient alkyne.
1,3-Dipole	Diazomethane	Highly reactive but hazardous. Must be handled with extreme care.
Solvent	Diethyl Ether	Standard solvent for reactions with diazomethane.
Temperature	0 °C to Room Temperature	Low temperature is critical for safety during addition of diazomethane.
Quench	Acetic Acid	Safely neutralizes unreacted diazomethane.
Expected Product	Mixture of methyl 3-octyl-1H-pyrazole-4-carboxylate and methyl 4-octyl-1H-pyrazole-3-carboxylate	The 4-carboxy isomer is generally the major product due to FMO control.

References

- Dean, J. R. (n.d.). Chemistry 210 Experiment 9. Reed College. Retrieved from [Link]
- Organic Chemistry Portal. (n.d.). Click Chemistry Azide-Alkyne Cycloaddition. Retrieved from [Link]
- Organic Syntheses. (n.d.). Methyl (1R,5R)-5-hydroxy-2-cyclopentene-1-acetate. Org. Synth. 1986, 64, 118. Retrieved from [Link]
- Di Vaira, M., Bazzicalupi, C., Orioli, P., Messori, L., & Biver, T. (2017). Copper-Catalyzed Azide–Alkyne Cycloaddition (CuAAC) by Functionalized NHC-Based Polynuclear Catalysts: Scope and Mechanistic Insights. Inorganic Chemistry, 56(11), 6537–6549. Retrieved from [Link]

© 2026 BenchChem. All rights reserved.

- ChemHelpASAP. (2021, February 19). Intramolecular Diels-Alder cycloaddition on a furan ring [Video]. YouTube. Retrieved from [Link]
- Scribd. (n.d.). Diels Alder Lab. Retrieved from [Link]
- Prescher, J. A., & Bertozzi, C. R. (2005). Copper-Catalyzed Azide-Alkyne Click Chemistry for Bioconjugation. In Current Protocols in Chemical Biology (pp. 13-29). John Wiley & Sons, Inc. Retrieved from [Link]
- Organic Chemistry Portal. (n.d.). Huisgen 1,3-Dipolar Cycloaddition. Retrieved from [Link]
- Fernández, I., & Bickelhaupt, F. M. (2020). How Lewis Acids Catalyze Diels–Alder Reactions. Angewandte Chemie International Edition, 59(15), 6201–6206. Retrieved from [Link]
- Al-Mulla, A. (2017). Recent Advances in the Synthesis of Pyrazole Derivatives: A Review. Molecules, 22(1), 136. Retrieved from [Link]
- Reissig, H. U., & Zimmer, R. (2020). The Huisgen Reaction: Milestones of the 1,3-Dipolar Cycloaddition. Angewandte Chemie International Edition, 59(32), 13186-13207. Retrieved from [Link]
- Bakthadoss, M., & Chithiraputhu, T. (2017). Solvent-free copper-catalyzed click chemistry for the synthesis of N-heterocyclic hybrids based on quinoline and 1,2,3-triazole. Beilstein Journal of Organic Chemistry, 13, 2446–2455. Retrieved from [Link]
- Wolber, E. K. A., & Dehaen, W. (2018). Azide-alkyne cycloaddition (click) reaction in biomass-derived solvent CyreneTM under one-pot conditions. Beilstein Archives. Retrieved from [Link]
- Ghandi, M., & Aryan, R. (2016). Huisgen's Cycloaddition Reactions: A Full Perspective. Current Organic Synthesis, 13(5), 674-692. Retrieved from [Link]
- Ess, D. H., & Houk, K. N. (2007). Diels–Alder Reactions of Furan: Reactivity, Selectivity, and the Effect of Lewis Acid Catalysis. Journal of the American Chemical Society, 129(34), 10413–10423. Retrieved from [Link]
- Wikipedia. (n.d.). Diels–Alder reaction. Retrieved from [Link]

© 2026 BenchChem. All rights reserved.

- Master Organic Chemistry. (2018, November 5). Regiochemistry In the Diels-Alder Reaction. Retrieved from [Link]
- The Organic Chemistry Tutor. (2018, September 20). 16.5b Stereoselectivity and Regioselectivity in Diels Alder Reactions [Video]. YouTube. Retrieved from [Link]
- Domingo, L. R., & Sáez, J. A. (2009). Understanding the mechanism of the [3+2] cycloaddition between diazomethane and substituted ethylenes. A DFT study. Organic & Biomolecular Chemistry, 7(17), 3576-3583. Retrieved from [Link]
- ResearchGate. (n.d.). Diels–Alder reaction of cyclopentadiene and methyl acrylate. Retrieved from [Link]
- Domingo, L. R., Aurell, M. J., Pérez, P., & Contreras, R. (2002). A DFT study of the Lewis acid catalyzed Diels-Alder reaction. Journal of Physical Organic Chemistry, 15(10), 702-711. Retrieved from [Link]
- Domingo, L. R. (2020). Unveiling the Lewis Acid Catalyzed Diels–Alder Reactions Through the Molecular Electron Density Theory. Molecules, 25(11), 2535. Retrieved from [Link]
- ResearchGate. (n.d.). Synthesis and Characterization of Some New Pyrazole Compounds. Retrieved from [Link]
- ResearchGate. (n.d.). 194 recent advances in the synthesis of new pyrazole derivatives. Retrieved from [Link]
- PubMed. (2000). Synthesis and pharmacological study of ethyl 1-methyl-5-(substituted 3,4-dihydro-4-oxoquinazolin-3-yl)-1H-pyrazole-4-acetates. Retrieved from [Link]
- Khan Academy. (n.d.). Diels-Alder reaction. Retrieved from [Link]
- Master Organic Chemistry. (2017, November 13). Stereochemistry of the Diels-Alder Reaction. Retrieved from [Link]

Need Custom Synthesis?

BenchChem offers custom synthesis for rare earth carbides and specific isotopiclabeling.

Email: info@benchchem.com or Request Quote Online.

Sources

- 1. mdpi.com [mdpi.com]
- 2. masterorganicchemistry.com [masterorganicchemistry.com]
- 3. m.youtube.com [m.youtube.com]
- 4. researchgate.net [researchgate.net]
- 5. Synthesis and pharmacological study of ethyl 1-methyl-5-(substituted 3,4-dihydro-4-oxoquinazolin-3-yl)-1H-pyrazole-4-acetates - PubMed [pubmed.ncbi.nlm.nih.gov]
- 6. Chemistry 210 Experiment 9 [home.miracosta.edu]
- 7. Click Chemistry [organic-chemistry.org]
- 8. Copper-Catalyzed Azide–Alkyne Cycloaddition (CuAAC) by Functionalized NHC-Based Polynuclear Catalysts: Scope and Mechanistic Insights - PMC [pmc.ncbi.nlm.nih.gov]
- 9. BJOC - Solvent-free copper-catalyzed click chemistry for the synthesis of N-heterocyclic hybrids based on quinoline and 1,2,3-triazole [beilstein-journals.org]
- 10. scispace.com [scispace.com]
- 11. mdpi.com [mdpi.com]

- To cite this document: BenchChem. [Application Notes and Protocols for Cycloaddition Reactions Involving Methyl 2-undecynoate]. BenchChem, [2026]. [Online PDF]. Available at: [https://www.benchchem.com/product/b078527/docs#application-notes-and-protocols-for-cycloaddition-reactions-involving-methyl-2-undecynoate]

Disclaimer & Data Validity:

The information provided in this document is for Research Use Only (RUO) and is strictly not intended for diagnostic or therapeutic procedures. While BenchChem strives to provide accurate protocols, we make no warranties, express or implied, regarding the fitness of this product for every specific experimental setup.

Technical Support: The protocols provided are for reference purposes. Unsure if this reagent suits your experiment?

Need Industrial/Bulk Grade? Request Custom Synthesis Quote

© 2026 BenchChem. All rights reserved.

BenchChem

Our mission is to be the trusted global source of essential and advanced chemicals, empowering scientists and researchers to drive progress in science and industry.

Contact

Address: 3281 E Guasti Rd

Ontario, CA 91761, United States

Phone: (601) 213-4426

Email: info@benchchem.com

Contact our Ph.D. Support Team for a compatibility check

© 2026 BenchChem. All rights reserved.