Application Note: High-Sensitivity GC-MS Analysis of Dibromomethane in Environmental Samples

Author: BenchChem Technical Support Team. **Date**: January 2026

Compound of Interest		
Compound Name:	*Dibromomethane*	
Cat. No.:	*B7768877*	*Get Quote*

Abstract

This application note provides a comprehensive guide for the quantitative analysis of **dibromomethane** (CH_2Br_2), also known as methylene bromide, in environmental matrices using Gas Chromatography-Mass Spectrometry (GC-MS). **Dibromomethane** is a halogenated organic compound used as a solvent and in organic synthesis, and it can be found as a disinfection byproduct in drinking water.[1][2] This document outlines a robust and validated protocol, from sample collection and preparation to instrumental analysis and data interpretation, designed for researchers, environmental scientists, and analytical chemists. The methodologies described herein are grounded in established principles of volatile organic compound (VOC) analysis and are supported by authoritative sources to ensure scientific integrity and reliable results.

Introduction

Dibromomethane (CAS No. 74-95-3) is a volatile organic compound (VOC) with a boiling point of 96-98°C and is slightly soluble in water.[2] Its presence in the environment can result from industrial activities and natural production by marine algae.[1][2] Due to its potential environmental and health impacts, sensitive and specific analytical methods are required for its detection and quantification at trace levels. Gas Chromatography-Mass Spectrometry (GC-MS) is the gold standard for this application, offering excellent chromatographic separation and definitive mass spectral identification.[3][4][5] This guide provides a detailed protocol for the

© 2025 BenchChem. All rights reserved.

analysis of **dibromomethane** in water samples, a common matrix of interest. The principles, however, can be adapted for other sample types with appropriate modifications to the sample preparation stage.

Scientific Principles

The GC-MS analysis of **dibromomethane** leverages its volatility for extraction from the sample matrix and its unique mass fragmentation pattern for unambiguous identification and quantification.

- Gas Chromatography (GC): The separation of **dibromomethane** from other volatile and semi-volatile compounds is achieved based on its boiling point and affinity for the stationary phase of the GC column.[6][7] A non-polar or mid-polar capillary column is typically employed for the analysis of halogenated hydrocarbons.[8][9][10]

- Mass Spectrometry (MS): Following separation by GC, the eluted **dibromomethane** molecules are ionized, typically by electron ionization (EI). The resulting molecular ion and its characteristic fragment ions are detected by the mass spectrometer, providing a unique "fingerprint" for the compound. The presence of two bromine isotopes (^{79}Br and ^{81}Br) in an approximate 1:1 ratio results in a distinctive isotopic pattern in the mass spectrum, which is a key feature for positive identification.[11][12]

Experimental Workflow

The overall workflow for the GC-MS analysis of **dibromomethane** is depicted in the following diagram. This process emphasizes careful sample handling and quality control to ensure the accuracy and reliability of the results.

© 2025 BenchChem. All rights reserved.

Click to download full resolution via product page

Caption: Workflow for GC-MS Analysis of **Dibromomethane**.

Detailed Protocols

Materials and Reagents

- **Dibromomethane** analytical standard (CAS: 74-95-3)[13][14]
- Solvents: Hexane or Dichloromethane (pesticide residue grade or equivalent)[6]
- Anhydrous Sodium Sulfate (ACS grade, baked at 400°C for 4 hours)
- Deionized water (18 MΩ·cm)
- Glassware: 40 mL amber glass vials with PTFE-lined septa, 2 mL autosampler vials with PTFE-lined septa, volumetric flasks, pipettes, separatory funnels.[6]

Standard Preparation

- Primary Stock Standard (1000 µg/mL): Accurately weigh approximately 10 mg of neat **dibromomethane** standard into a 10 mL volumetric flask containing ~9 mL of hexane. Record the exact weight and dilute to the mark. This solution should be stored at 4°C in the dark.
- Working Standards: Prepare a series of working standards by serial dilution of the primary stock standard in hexane. A typical calibration range might be 1-100 µg/L.

Sample Collection and Preservation

Collect water samples in 40 mL amber glass vials, ensuring no headspace (zero air bubbles). If residual chlorine is present, the samples should be dechlorinated with sodium thiosulfate. Preserve the samples by cooling to ≤4°C.[15] It is crucial to analyze the samples as soon as possible to minimize analyte loss due to volatilization.

Sample Preparation: Liquid-Liquid Extraction (LLE)

© 2025 BenchChem. All rights reserved.

This protocol is adapted from general principles outlined in EPA methods for volatile organic compounds.[16][17]

- Allow the water sample to come to room temperature.
- Transfer a 35 mL aliquot of the sample to a 60 mL separatory funnel.
- Add 2 mL of hexane to the separatory funnel.
- Shake the funnel vigorously for 2 minutes, with periodic venting to release pressure.
- Allow the layers to separate for at least 10 minutes.
- Drain the aqueous (lower) layer.
- Transfer the organic (upper) layer to a clean vial containing a small amount of anhydrous sodium sulfate to remove any residual water.
- Transfer the dried extract to a 2 mL autosampler vial for GC-MS analysis.

GC-MS Instrumental Parameters

The following table outlines a typical set of instrumental parameters for the analysis of **dibromomethane**. These may need to be optimized for your specific instrument and application.

© 2025 BenchChem. All rights reserved.

Parameter	Setting	Rationale
Gas Chromatograph		
Injection Port	Splitless	To maximize sensitivity for trace analysis.
Injection Volume	1 µL	
Injector Temperature	200°C	To ensure rapid and complete volatilization of the analyte.
Carrier Gas	Helium	An inert carrier gas compatible with mass spectrometry.[9]
Flow Rate	1.0 mL/min (constant flow)	
GC Column	DB-5ms, 30 m x 0.25 mm ID, 0.25 µm film thickness (or equivalent)	A non-polar column suitable for the separation of halogenated hydrocarbons.[7]
Oven Program	Initial: 40°C (hold 2 min), Ramp: 10°C/min to 200°C, Hold: 2 min	A temperature program that provides good separation of volatile compounds.
Mass Spectrometer		
Ion Source	Electron Ionization (EI)	Standard ionization technique for volatile organic compounds.
Ionization Energy	70 eV	Standard energy for generating reproducible mass spectra.
Source Temperature	230°C	
Quadrupole Temperature	150°C	
MS Transfer Line Temp	280°C	To prevent condensation of the analyte.
Acquisition Mode	Full Scan (m/z 45-200) and/or Selected Ion Monitoring (SIM)	Full scan for qualitative analysis and confirmation, SIM

© 2025 BenchChem. All rights reserved.

		for enhanced sensitivity in quantitative analysis.
SIM Ions for Dibromomethane	m/z 93, 95, 172, 174, 176	These are the characteristic ions of dibromomethane, including the molecular ion cluster.

Data Analysis and Quality Control

Identification

The identification of **dibromomethane** is based on two criteria:

- Retention Time: The retention time of the peak in the sample chromatogram must match that of a known standard within a predefined window (e.g., ±0.05 minutes).
- Mass Spectrum: The mass spectrum of the sample peak must match the reference spectrum of **dibromomethane**. The characteristic isotopic pattern of the bromine-containing ions must be present.

Mass Fragmentation of **Dibromomethane**

The electron ionization mass spectrum of **dibromomethane** is characterized by a prominent molecular ion cluster and several key fragment ions. The presence of two bromine atoms leads to a distinctive isotopic pattern for ions containing both atoms (M, M+2, M+4 in a 1:2:1 ratio) and ions containing one bromine atom (M, M+2 in a 1:1 ratio).[11][12]

© 2025 BenchChem. All rights reserved.

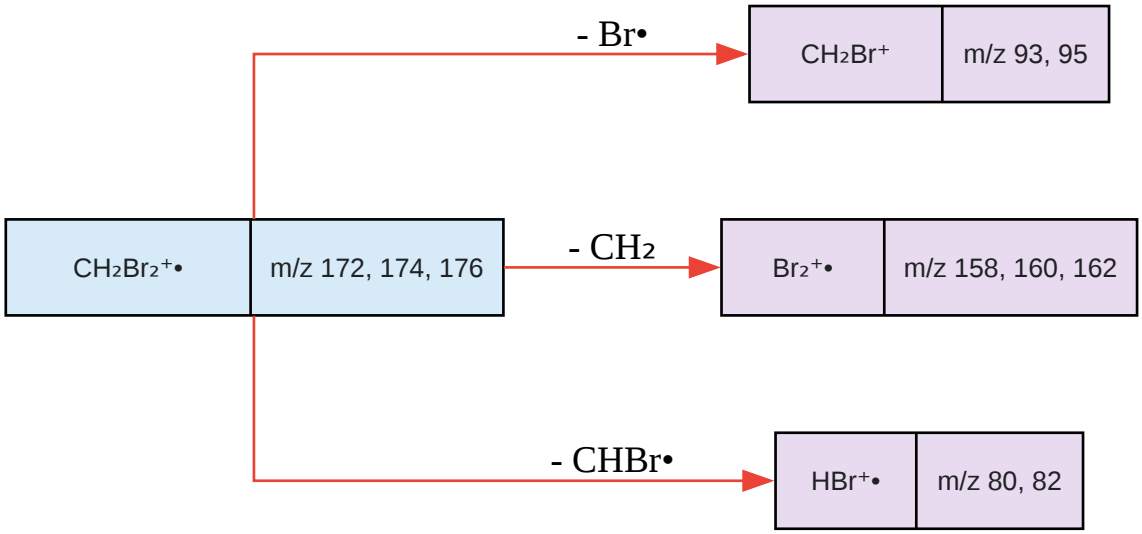

Click to download full resolution via product page

Caption: Simplified Fragmentation of **Dibromomethane**.

Quantification

Quantification is performed using an external standard calibration curve. A linear regression of the peak area versus the concentration of the calibration standards is used to determine the concentration of **dibromomethane** in the samples.

Quality Control

To ensure the reliability of the results, a robust quality control protocol should be implemented.[18]

- Method Blank: An aliquot of reagent water is carried through the entire analytical procedure to check for contamination.
- Laboratory Control Spike (LCS): A known amount of **dibromomethane** is added to a clean matrix and analyzed to assess the accuracy of the method.
- Matrix Spike/Matrix Spike Duplicate (MS/MSD): A known amount of **dibromomethane** is added to a sample aliquot in duplicate to evaluate the effect of the sample matrix on the analytical results.[15]

© 2025 BenchChem. All rights reserved.

- Continuing Calibration Verification (CCV): A mid-level calibration standard is analyzed periodically to ensure the stability of the instrument's response.

Conclusion

The GC-MS method described in this application note provides a sensitive, selective, and reliable approach for the determination of **dibromomethane** in water samples. Adherence to the detailed protocols for sample preparation, instrumental analysis, and quality control is essential for obtaining high-quality, defensible data. The principles outlined here can be readily adapted for the analysis of other volatile organic compounds in various environmental matrices.

References

- SCION Instruments. (n.d.). Sample preparation GC-MS. Retrieved from [Link]
- Hawco. (2024, October 24). Common Sample Preparation Techniques for GC-MS Analysis. Retrieved from [Link]
- Wikipedia. (n.d.). **Dibromomethane**. Retrieved from [Link]
- U.S. Environmental Protection Agency. (n.d.). Method 5000: Sample Preparation for Volatile Organic Compounds. Retrieved from [Link]
- Organomation. (n.d.). Preparing Samples for GC-MS/MS Analysis. Retrieved from [Link]
- Matrix Fine Chemicals. (n.d.). **DIBROMOMETHANE** | CAS 74-95-3. Retrieved from [Link]
- U.S. Environmental Protection Agency. (1999, December 13). Method 504.1: 1,2-DIBROMOETHANE (EDB) AND 1,2-DIBROMO-3-CHLOROPROPANE (DBCP) IN WATER BY MICROEXTRACTION AND GAS CHROMATOGRAPHY. Retrieved from [Link]
- U.S. Environmental Protection Agency. (n.d.). EPA-RCA: 8011: EDB and DBCP by Microextraction and Gas Chromatography. Retrieved from [Link]
- Agilent Technologies. (n.d.). Agilent J&W GC Column Selection Guide. Retrieved from [Link]
- Van Langenhove, H., et al. (2008). Quality control in quantification of volatile organic compounds analysed by thermal desorption-gas chromatography-mass spectrometry.

© 2025 BenchChem. All rights reserved.

- U.S. Environmental Protection Agency. (1992, July). Method 8011: 1,2-Dibromoethane and 1,2-Dibromo-3-chloropropane by Microextraction and Gas Chromatography. Retrieved from [Link]
- Florida-Spectrum Environmental Testing Laboratories. (n.d.). EAP Method 504. Retrieved from [Link]
- Phenomenex. (n.d.). **Dibromomethane**: CAS # 74-95-3 Compound Information and Applications for GC (Gas Chromatography) and LC (Liquid Chromatography) Analysis. Retrieved from [Link]
- Medistri SA. (2022, March 21). Volatile Organic Compounds (VOCs) Analysis by GC/MS. Retrieved from [Link]
- Postnova. (n.d.). Agilent J&W GC Column Selection Guide. Retrieved from [Link]
- ESSLAB. (n.d.). EPA Method 8000. Retrieved from [Link]
- U.S. Environmental Protection Agency. (2019, December). Method TO-15A: Determination of Volatile Organic Compounds (VOCs) in Air Collected in Specially Prepared Canisters and Analyzed by Gas Chromatography Mass Spectrometry (GC-MS). Retrieved from [Link]
- Doc Brown's Chemistry. (n.d.). Interpreting the fragmentation pattern of the mass spectrum of 1,1-dibromoethane. Retrieved from [Link]
- Doc Brown's Chemistry. (n.d.). Interpreting the fragmentation pattern of the mass spectrum of 1,2-dibromoethane. Retrieved from [Link]
- North Carolina Division of Air Quality. (2022, June 17). DAQ-03-003.5 Standard Operating Procedure (SOP) For the Markes-Agilent Gas Chromatography-Mass Spectrometry (GC-MS) Analysis of Volatile Organic Compounds (VOCs) in Canister Samples. Retrieved from [Link]
- National Institute of Standards and Technology. (n.d.). Methane, dibromo-. Retrieved from [Link]

© 2025 BenchChem. All rights reserved.

- New York State Department of Health. (n.d.). Volatile Organic Compounds - by GC/MS Capillary Column Technique. Retrieved from [Link]
- Restek. (n.d.). Guide to GC Column Selection and Optimizing Separations. Retrieved from [Link]
- Agency for Toxic Substances and Disease Registry. (2005, September). Toxicological Profile for Bromoform and Dibromochloromethane. Retrieved from [Link]
- MassBank. (2008, October 21). **dibromomethane**. Retrieved from [Link]
- LabRulez GCMS. (n.d.). Halogenated hydrocarbons - Analysis of **dibromomethane** in methane. Retrieved from [Link]
- National Center for Biotechnology Information. (n.d.). **Dibromomethane**. PubChem Compound Database. Retrieved from [Link]
- Phenomenex. (2025, July 24). Guide to Choosing a GC Column. Retrieved from [Link]
- Agency for Toxic Substances and Disease Registry. (2005, September). Toxicological Profile for Bromoform and Dibromochloromethane. Retrieved from [Link]
- Agilent Technologies. (2011, October 31). Halogenated hydrocarbons Analysis of **dibromomethane** in methane. Retrieved from [Link]

Need Custom Synthesis?

BenchChem offers custom synthesis for rare earth carbides and specific isotopiclabeling.

Email: info@benchchem.com or Request Quote Online.

Sources

- 1. Dibromomethane | 74-95-3 [chemicalbook.com]
- 2. Dibromomethane - Wikipedia [en.wikipedia.org]
- 3. GC-MS Sample Preparation | Thermo Fisher Scientific - JP [thermofisher.com]

- 4. ANALYTICAL METHODS - Toxicological Profile for Bromoform and Dibromochloromethane - NCBI Bookshelf [ncbi.nlm.nih.gov]
- 5. atsdr.cdc.gov [atsdr.cdc.gov]
- 6. Sample preparation GC-MS [scioninstruments.com]
- 7. postnova.com [postnova.com]
- 8. researchgate.net [researchgate.net]
- 9. Guide to GC Column Selection and Optimizing Separations [discover.restek.com]
- 10. fishersci.ca [fishersci.ca]
- 11. C2H4Br2 CH3CHBr2 mass spectrum of 1,1-dibromoethane fragmentation pattern of m/z m/e ions for analysis and identification of 1,1-dibromoethane image diagram doc brown's advanced organic chemistry revision notes [docbrown.info]
- 12. C2H4Br2 BrCH2CH2Br mass spectrum of 1,2-dibromoethane fragmentation pattern of m/z m/e ions for analysis and identification of 1,2-dibromoethane image diagram doc brown's advanced organic chemistry revision notes [docbrown.info]
- 13. accustandard.com [accustandard.com]
- 14. Dibromomethane analytical standard 74-95-3 [sigmaaldrich.com]
- 15. 19january2017snapshot.epa.gov [19january2017snapshot.epa.gov]
- 16. epa.gov [epa.gov]
- 17. flenviro.com [flenviro.com]
- 18. Quality control in quantification of volatile organic compounds analysed by thermal desorption-gas chromatography-mass spectrometry - PubMed [pubmed.ncbi.nlm.nih.gov]

- To cite this document: BenchChem. [Application Note: High-Sensitivity GC-MS Analysis of Dibromomethane in Environmental Samples]. BenchChem, [2026]. [Online PDF]. Available at: [https://www.benchchem.com/product/b7768877#gas-chromatography-mass-spectrometry-gc-ms-analysis-of-dibromomethane]

Disclaimer & Data Validity:

The information provided in this document is for Research Use Only (RUO) and is strictly not intended for diagnostic or therapeutic procedures. While BenchChem strives to provide accurate protocols, we make no warranties, express or implied, regarding the fitness of this product for every specific experimental setup.

© 2025 BenchChem. All rights reserved.

Technical Support: The protocols provided are for reference purposes. Unsure if this reagent suits your experiment? [Contact our Ph.D. Support Team for a compatibility check]

Need Industrial/Bulk Grade? Request Custom Synthesis Quote

BenchChem

Our mission is to be the trusted global source of essential and advanced chemicals, empowering scientists and researchers to drive progress in science and industry.

Contact

Address: 3281 E Guasti Rd

Ontario, CA 91761, United States

Phone: (601) 213-4426

Email: info@benchchem.com

© 2025 BenchChem. All rights reserved.