1-Naphthyl Acetate: A Technical Guide for Researchers

Author: BenchChem Technical Support Team. **Date**: April 2026

Compound of Interest

Compound Name:	*1-Naphthyl acetate*
CAS No.:	*29692-55-5*
Cat. No.:	*B7734584*

Get Quote

Authored for researchers, scientists, and drug development professionals, this in-depth technical guide provides comprehensive information on **1-Naphthyl acetate**, a versatile compound with significant applications in biochemical assays and chemical synthesis.

This document details the physicochemical properties, synthesis, and key applications of **1-Naphthyl acetate**, with a focus on its utility as an enzymatic substrate and a reagent in photochemical rearrangements. Experimental protocols and visual diagrams are provided to support practical laboratory applications.

Core Compound Identification

1-Naphthyl acetate, also known as α-Naphthyl acetate, is an organic ester with the chemical formula $C_{12}H_{10}O_2$.[1] It serves as a valuable tool in various scientific disciplines.

© 2026 BenchChem. All rights reserved.

Identifier	Value
CAS Number	830-81-9[1][2]
Molecular Weight	186.21 g/mol
Molecular Formula	$C_{12}H_{10}O_2$
Synonyms	α-Naphthyl acetate, Acetic acid 1-naphthyl ester, 1-Acetoxynaphthalene

Physicochemical Properties

1-Naphthyl acetate is a white to off-white crystalline solid under standard conditions. Its key physical and chemical properties are summarized below for easy reference.

Property	Value
Appearance	White to light yellow crystalline powder
Melting Point	43-46 °C
Boiling Point	310 °C
Solubility	Insoluble in water
Flash Point	113 °C
Density	1.1305 g/cm³ (at 50 °C)

Synthesis

The synthesis of **1-Naphthyl acetate** is typically achieved through the acetylation of 1-naphthol. This reaction can be performed using either acetic anhydride or acetyl chloride in the presence of a base, such as pyridine or sodium hydroxide, which acts as a catalyst.

© 2026 BenchChem. All rights reserved.

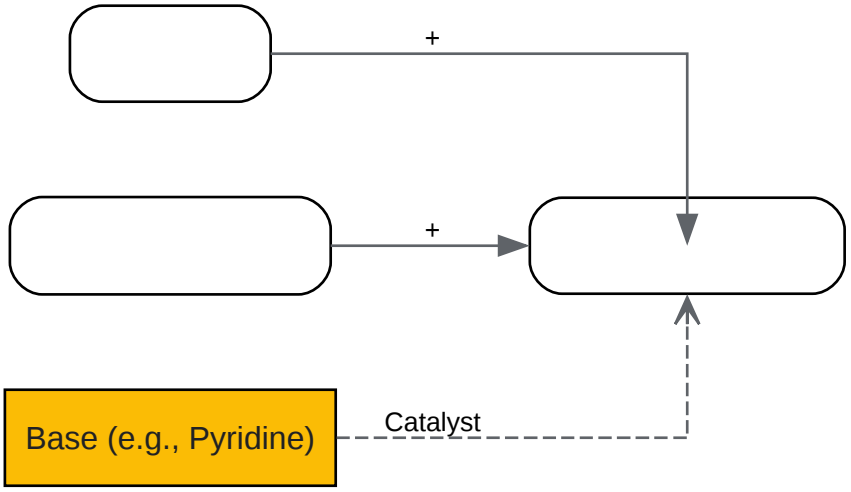

Click to download full resolution via product page

Caption: General synthesis pathway for **1-Naphthyl acetate**.

Applications in Research and Development

1-Naphthyl acetate has several important applications in scientific research, particularly in the fields of enzymology, histology, and synthetic chemistry.

Enzymatic Substrate for Esterases

A primary application of **1-Naphthyl acetate** is as a chromogenic substrate for the detection of esterase activity, most notably acetylcholinesterase (AChE). The enzymatic hydrolysis of **1-Naphthyl acetate** yields 1-naphthol, which can then be coupled with a diazonium salt (e.g., Fast Blue RR or Fast Blue BB) to produce a colored precipitate. This colorimetric reaction allows for the quantification of esterase activity.

This property is particularly useful for:

- Macrophage Identification: It is used in a rapid staining method to identify macrophages, which exhibit non-specific esterase activity.
- Pesticide Detection: The inhibition of AChE by organophosphorus pesticides can be detected by a decrease in the hydrolysis of **1-Naphthyl acetate**, making it a potential tool for detecting organophosphate poisoning.

© 2026 BenchChem. All rights reserved.

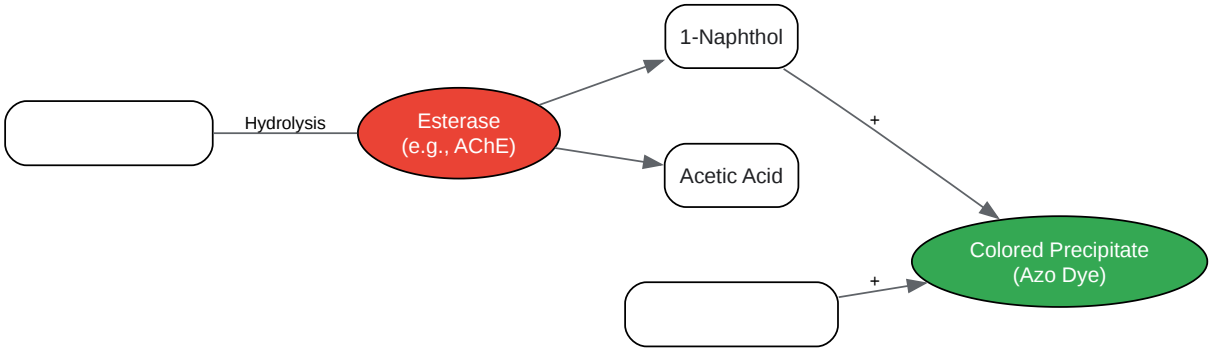

Click to download full resolution via product page

Caption: Workflow for the detection of esterase activity.

Photo-Fries Rearrangement

1-Naphthyl acetate is a model compound for studying the photo-Fries rearrangement, a photochemical reaction where an aryl ester is converted into a hydroxy aryl ketone upon UV irradiation. This reaction proceeds through a radical mechanism and yields 2-acetyl-1-naphthol and 4-acetyl-1-naphthol as the primary products, along with 1-naphthol as a side product. The study of this rearrangement provides insights into reaction mechanisms in photochemistry.

Experimental Protocols

Protocol for α-Naphthyl Acetate Esterase Staining

This protocol is adapted for the cytochemical demonstration of non-specific esterase activity in hematopoietic cells.

Reagents:

- Fixative solution (e.g., Citrate-Acetone-Formaldehyde)
- TRIZMAL™ 7.6 Buffer Concentrate
- Deionized water

© 2026 BenchChem. All rights reserved.

- Sodium Nitrite Solution
- Fast Blue BB Base Solution
- α-Naphthyl Acetate Solution

Procedure:

- Fix blood or bone marrow films in the fixative solution for 30 seconds at room temperature.
- Rinse the slides thoroughly with deionized water for 45-60 seconds.
- Prepare the incubation solution immediately before use: a. Add 1 ml of Sodium Nitrite Solution to 1 ml of Fast Blue BB Base Solution. Mix by inversion and let stand for at least 2 minutes. b. Add the mixture from step 3a to 40 ml of prewarmed (37°C) deionized water. c. Add 5 ml of TRIZMAL™ 7.6 Buffer Concentrate. d. Add 1 ml of α-Naphthyl Acetate Solution.
- Immerse the fixed slides in the incubation solution.
- Incubate at 37°C and monitor for the development of colored deposits at sites of enzyme activity.
- Rinse the slides and counterstain if desired.

Protocol for Photo-Fries Rearrangement of **1-Naphthyl Acetate**

This protocol provides a general methodology for the photochemical transformation of **1-Naphthyl acetate**.

Materials:

- **1-Naphthyl acetate**
- Methanol (or other suitable solvent)
- UV lamp (low wavelength, e.g., 200–380 nm)

© 2026 BenchChem. All rights reserved.

- Reaction vessel (e.g., quartz round bottom flask)
- Nitrogen gas source
- Column chromatography setup (Silica gel)

Procedure:

- Dissolve a known amount of **1-Naphthyl acetate** (e.g., 0.4 g) in a suitable volume of methanol (e.g., 75 ml) in the reaction vessel.
- Purge the solution with nitrogen gas to create an inert atmosphere.
- Irradiate the solution with a UV lamp for a specified period (e.g., 6 hours).
- After irradiation, remove the solvent under reduced pressure.
- Separate the products (2-acetyl-1-naphthol, 4-acetyl-1-naphthol, and 1-naphthol) from the reaction mixture using column chromatography with silica gel.
- Analyze the fractions using techniques such as TLC, NMR, and IR spectroscopy to confirm the identity of the products.

Need Custom Synthesis?

BenchChem offers custom synthesis for rare earth carbides and specific isotopiclabeling.

Email: info@benchchem.com or Request Quote Online.

References

- 1. 1-Naphthyl acetate [himedialabs.com]
- 2. Page loading... [guidechem.com]
- To cite this document: BenchChem. [1-Naphthyl Acetate: A Technical Guide for Researchers]. BenchChem, [2026]. [Online PDF]. Available at: [https://www.benchchem.com/product/b7734584/docs#1-naphthyl-acetate-a-technical-guide-for-researchers]

Disclaimer & Data Validity:

The information provided in this document is for Research Use Only (RUO) and is strictly not intended for diagnostic or therapeutic procedures. While BenchChem strives to provide accurate protocols, we make no warranties, express or implied, regarding the fitness of this product for every specific experimental setup.

Technical Support: The protocols provided are for reference purposes. Unsure if this reagent suits your experiment?

Need Industrial/Bulk Grade? Request Custom Synthesis Quote

BenchChem

Our mission is to be the trusted global source of essential and advanced chemicals, empowering scientists and researchers to drive progress in science and industry.

Contact

Address: 3281 E Guasti Rd

Ontario, CA 91761, United States

Phone: (601) 213-4426

Email: info@benchchem.com

Contact our Ph.D. Support Team for a compatibility check

© 2026 BenchChem. All rights reserved.