TCTU in Peptide Synthesis: A Comparative Purity Analysis

Author: BenchChem Technical Support Team. **Date**: April 2026

Compound of Interest

Compound Name:	*TCTU*
Cat. No.:	*B7725894*

Get Quote

In the landscape of solid-phase peptide synthesis (SPPS), the choice of coupling reagent is a critical determinant of the final peptide's purity and overall yield. For researchers, scientists, and professionals in drug development, selecting an optimal reagent is paramount for efficient and reliable synthesis, particularly when dealing with complex or "difficult" peptide sequences. This guide provides an objective comparison of O-(1H-6-Chloro-benzotriazol-1-yl)-1,1,3,3-tetramethyluronium tetrafluoroborate (**TCTU**) with other commonly used coupling reagents, supported by experimental data to inform reagent selection for high-purity peptide production.

Performance Comparison of Coupling Reagents

The efficacy of a coupling reagent is primarily assessed by the purity of the crude peptide it produces and the overall yield of the synthesis. Difficult sequences, such as the Acyl Carrier Protein (65-74) fragment (ACP(65-74)), are often used as benchmarks to evaluate reagent performance due to their propensity for aggregation and incomplete coupling.[1]

Experimental data from comparative studies on the synthesis of the ACP(65-74) fragment and other peptides reveal significant differences in the performance of various coupling reagents. **TCTU** and its analogue HCTU, both 6-chloro-HOBt-based reagents, have demonstrated high efficiency.[2][3] In one study, **TCTU** showed a high yield of 87% in the synthesis of ACP(65-74).

© 2026 BenchChem. All rights reserved.

[2][4] Another comparative study on the synthesis of ACP(65-74) provided crude purity data for several activators at different coupling times, highlighting the superior performance of HATU and HCTU, especially with shorter reaction times.[5]

Quantitative Data Summary

The following tables summarize the quantitative data on the performance of **TCTU** and other common coupling reagents in the synthesis of the difficult ACP(65-74) sequence.

Table 1: Yield Comparison of Coupling Reagents in the Synthesis of ACP(65-74)

Coupling Reagent	Yield (%)
TCTU	87
TBTU	Lower than TCTU

Source: BenchChem, 2025.[4]

Table 2: Crude Purity Comparison of Coupling Reagents in the Synthesis of ACP(65-74)

Coupling Reagent	Crude Purity (%) with 2x1 min Coupling	Crude Purity (%) with 2x20 min Coupling
HATU	83.63	79.91
HCTU	Not specified in this study	80.52
PyBOP	48.11	70.27

Source: Luxembourg Bio Technologies, 2011.[5]

While direct, side-by-side crude purity percentages for **TCTU** were not available in the reviewed literature, studies have indicated that new chlorine-containing reagents like **TCTU** are effective in synthesizing difficult peptide sequences.[2] The primary byproduct in the synthesis of ACP(65-74) is often a deletion peptide, and the use of **TCTU** has been shown to decrease the formation of such byproducts, implying a higher purity of the target peptide.

© 2026 BenchChem. All rights reserved.

Experimental Protocols

To ensure the reproducibility and validity of comparative studies, standardized experimental protocols are essential. Below are representative methodologies for performing a comparative peptide synthesis and for analyzing the resulting product for purity.

Protocol 1: Comparative Solid-Phase Peptide Synthesis (SPPS) of ACP(65-74)

This protocol outlines a general procedure for synthesizing the ACP(65-74) fragment (H-Val-Gln-Ala-Ala-Ile-Asp-Tyr-Ile-Asn-Gly-NH_2) using different coupling reagents for comparison.

- Resin Swelling: Swell a Rink Amide resin in N,N-dimethylformamide (DMF) for 1 hour.
- Fmoc Deprotection: Treat the resin with 20% piperidine in DMF for 5 minutes, followed by a second treatment for 15 minutes to remove the Fmoc protecting group. Wash the resin thoroughly with DMF.
- Amino Acid Coupling (Iterative Cycle):
  - Pre-activation (for aminium/uronium reagents): In a separate vessel, dissolve 3-5 equivalents of the Fmoc-protected amino acid and 3-5 equivalents of the coupling reagent (**TCTU**, HATU, HCTU, or PyBOP) in DMF. Add 6-10 equivalents of a base such as N,N-diisopropylethylamine (DIPEA). Allow to pre-activate for a few minutes.
  - Coupling Reaction: Add the activated amino acid solution to the deprotected resin. Agitate the mixture for the desired coupling time (e.g., 2x1 minute or 2x20 minutes for comparative studies).
  - Washing: Wash the resin with DMF to remove excess reagents and byproducts.
  - Repeat the deprotection and coupling steps for each amino acid in the sequence.
- Final Deprotection and Cleavage: After the final amino acid coupling and Fmoc deprotection, wash the resin with dichloromethane (DCM). Treat the resin with a cleavage cocktail (e.g., 95% trifluoroacetic acid (TFA), 2.5% water, 2.5% triisopropylsilane (TIS)) for 2-3 hours to cleave the peptide from the resin and remove side-chain protecting groups.

© 2026 BenchChem. All rights reserved.

- Peptide Precipitation and Isolation: Filter the cleavage mixture and precipitate the crude peptide by adding it to cold diethyl ether. Centrifuge to pellet the peptide, decant the ether, and repeat the ether wash. Dry the peptide pellet under vacuum.[4]

Protocol 2: Purity Analysis by Reversed-Phase High-Performance Liquid Chromatography (RP-HPLC)

This protocol describes the analysis of the crude peptide to determine its purity.

- Sample Preparation: Dissolve the dried crude peptide in a suitable solvent, typically 0.1% TFA in a water/acetonitrile mixture.
- Chromatographic Conditions:[4]
  - Column: C18 stationary phase (e.g., 250 x 4.6 mm, 5 µm particle size).
  - Mobile Phase A: 0.1% TFA in water.
  - Mobile Phase B: 0.1% TFA in acetonitrile.
  - Gradient: A linear gradient from a low to a high percentage of Mobile Phase B is used to elute the peptide and its impurities (e.g., 5% to 95% B over 30-60 minutes).
  - Flow Rate: 1 mL/min.
  - Detection: UV absorbance at 214 nm or 220 nm.
- Data Analysis: Integrate the peak areas of the chromatogram. The purity of the peptide is calculated as the percentage of the main peak area relative to the total area of all peaks.

Mandatory Visualizations

Solid-Phase Peptide Synthesis (SPPS) Workflow

The following diagram illustrates the general iterative workflow of solid-phase peptide synthesis.

© 2026 BenchChem. All rights reserved.

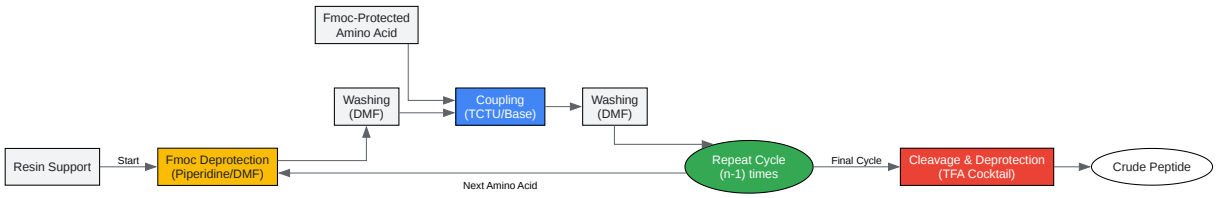

Click to download full resolution via product page

Caption: General workflow for Fmoc-based solid-phase peptide synthesis (SPPS).

Activation Mechanism of TCTU

TCTU, like other uronium/aminium-based coupling reagents, activates the carboxylic acid of an amino acid by forming a highly reactive active ester. This facilitates nucleophilic attack by the free amine of the growing peptide chain.

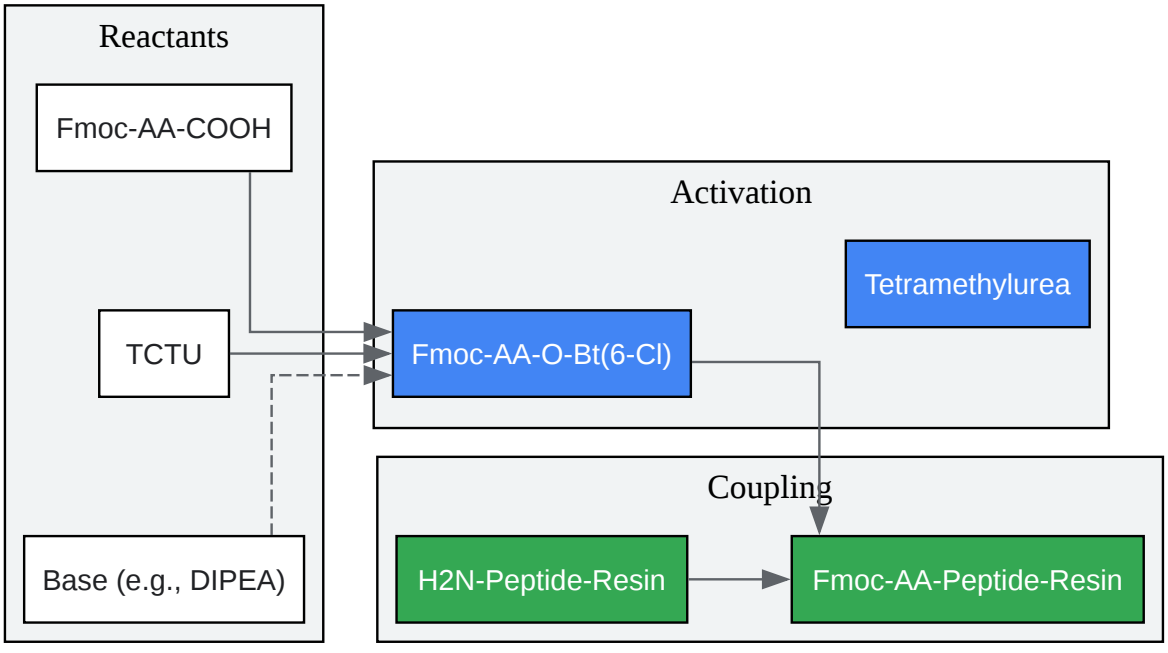

© 2026 BenchChem. All rights reserved.

Click to download full resolution via product page

Caption: Activation of a carboxylic acid by **TCTU** to form a reactive ester.

Conclusion

The selection of a coupling reagent is a critical decision in peptide synthesis that directly influences the purity and yield of the final product. The available data suggests that **TCTU** is a highly efficient coupling reagent, providing excellent yields, particularly for challenging sequences like ACP(65-74). While direct quantitative comparisons of crude purity with reagents like HATU and HCTU are not extensively documented in the literature, the observed reduction in byproducts with **TCTU** indicates a favorable purity profile. For routine syntheses, a variety of reagents may be suitable, but for difficult sequences or when high purity is paramount, the use of advanced and highly efficient reagents such as **TCTU**, HCTU, and HATU is well-justified. Researchers should consider conducting small-scale pilot experiments to determine the optimal coupling conditions for their specific peptide synthesis.

Need Custom Synthesis?

BenchChem offers custom synthesis for rare earth carbides and specific isotopiclabeling.

Email: info@benchchem.com or Request Quote Online.

References

- 1. pentelutelabmit.com [pentelutelabmit.com]
- 2. researchgate.net [researchgate.net]
- 3. researchgate.net [researchgate.net]
- 4. benchchem.com [benchchem.com]
- 5. luxembourg-bio.com [luxembourg-bio.com]
- To cite this document: BenchChem. [TCTU in Peptide Synthesis: A Comparative Purity Analysis]. BenchChem, [2026]. [Online PDF]. Available at: [https://www.benchchem.com/product/b7725894/docs#tctu-in-peptide-synthesis-a-comparative-purity-analysis]

© 2026 BenchChem. All rights reserved.

Disclaimer & Data Validity:

The information provided in this document is for Research Use Only (RUO) and is strictly not intended for diagnostic or therapeutic procedures. While BenchChem strives to provide accurate protocols, we make no warranties, express or implied, regarding the fitness of this product for every specific experimental setup.

Technical Support: The protocols provided are for reference purposes. Unsure if this reagent suits your experiment?

Need Industrial/Bulk Grade? Request Custom Synthesis Quote

BenchChem

Our mission is to be the trusted global source of essential and advanced chemicals, empowering scientists and researchers to drive progress in science and industry.

Contact

Address: 3281 E Guasti Rd

Ontario, CA 91761, United States

Phone: (601) 213-4426

Email: info@benchchem.com

Contact our Ph.D. Support Team for a compatibility check

© 2026 BenchChem. All rights reserved.