# TCTU: A Comprehensive Technical Guide to Safety and Handling

**Author**: BenchChem Technical Support Team. **Date**: April 2026

***Compound of Interest***

*Compound Name:* *TCTU*

*Cat. No.:* *B7725894*

*Get Quote*

For Researchers, Scientists, and Drug Development Professionals

## Introduction

O-(6-Chlorobenzotriazol-1-yl)-N,N,N',N'-tetramethyluronium tetrafluoroborate, commonly known as **TCTU**, is a highly efficient coupling reagent widely utilized in peptide synthesis and other areas of organic chemistry. Its primary function is to facilitate the formation of amide bonds by activating carboxylic acids for reaction with amines. While effective, the safe handling of **TCTU** and similar uronium-based coupling reagents is paramount due to their potential reactivity and associated health hazards.

This technical guide provides an in-depth overview of the safety and handling precautions for **TCTU**. It includes a summary of its chemical and physical properties, available toxicological data, and detailed experimental protocols for assessing its potential hazards. This document is intended to serve as a comprehensive resource for laboratory personnel to ensure the safe and effective use of this reagent.

## Chemical and Physical Properties

© 2026 BenchChem. All rights reserved.

A summary of the key chemical and physical properties of **TCTU** is presented in Table 1. This data is essential for understanding its behavior under various laboratory conditions.

| Property | Value | Reference(s) |
|---|---|---|
| Appearance | White to off-white crystalline powder | [1][2][3] |
| Molecular Formula | $C_{11}H_{15}BClF_4N_5O$ | [1][2][3] |
| Molecular Weight | 355.53 g/mol | [1][2][3] |
| CAS Number | 330641-16-2 | [1][2][3] |
| Melting Point | >185 °C | [4] |
| Purity | ≥98% (HPLC) | [2][3] |
| Storage Temperature | 2-8°C | [2][4] |

# Toxicological Data and Hazard Assessment

The toxicological properties of **TCTU** have not been extensively investigated. However, data from a Safety Data Sheet (SDS) and information on structurally similar uronium-based coupling reagents provide insight into its potential hazards.

## Acute Toxicity

The available acute toxicity data for **TCTU** is limited to oral exposure in rats.

| Route | Species | Value | Reference(s) |
|---|---|---|---|
| Oral | Rat | LD50 > 2000 mg/kg | [5] |

Due to the lack of specific data for **TCTU**, it is prudent to consider the toxicology of related compounds such as HBTU, TBTU, and HCTU. These compounds are known to be skin and respiratory irritants, and more significantly, they are recognized as potent skin and respiratory sensitizers.[1][6][7][8][9][10][11][12][13] Repeated exposure to these reagents can lead to severe allergic reactions, including anaphylaxis.[6][9][10][11]

© 2026 BenchChem. All rights reserved.

## Hazard Identification

Based on available information for **TCTU** and related compounds, the primary hazards are:

- Skin Irritation: May cause skin irritation upon contact.[14][15]
- Eye Irritation: May cause serious eye irritation.[14][15]
- Respiratory Irritation: May cause respiratory irritation if inhaled.[14][15]
- Sensitization: Potential for allergic skin reactions and respiratory sensitization with repeated exposure.[1][6][7][8][9][10][11][12][13]

## Safety and Handling Precautions

Given the potential hazards, strict safety protocols should be followed when handling **TCTU**.

## Personal Protective Equipment (PPE)

- Gloves: Chemical-resistant gloves (e.g., nitrile) should be worn at all times.
- Eye Protection: Safety glasses with side shields or chemical goggles are mandatory.
- Lab Coat: A flame-retardant lab coat should be worn to protect from splashes.
- Respiratory Protection: When handling the solid powder outside of a certified chemical fume hood, a properly fitted respirator (e.g., N95 or higher) is recommended to prevent inhalation.

## Engineering Controls

- Chemical Fume Hood: All weighing and handling of solid **TCTU** should be performed in a certified chemical fume hood to minimize inhalation exposure.
- Ventilation: The laboratory should be well-ventilated.

## Safe Handling Practices

- Avoid generating dust.
- Avoid contact with skin, eyes, and clothing.

© 2026 BenchChem. All rights reserved.

- Wash hands thoroughly after handling.
- Do not eat, drink, or smoke in the laboratory.

## Storage

- Store in a tightly sealed container in a cool, dry, and well-ventilated area.
- Keep away from incompatible materials such as strong oxidizing agents.

## Disposal

- Dispose of **TCTU** and any contaminated materials in accordance with local, state, and federal regulations.
- Consult your institution's environmental health and safety department for specific disposal procedures.

# Experimental Protocols

The following sections detail standardized experimental protocols for assessing the toxicological properties of chemical reagents like **TCTU**. These are based on internationally recognized guidelines from the Organisation for Economic Co-operation and Development (OECD).

## Protocol for Determining Solubility in Organic Solvents

Objective: To determine the qualitative solubility of **TCTU** in various organic solvents commonly used in a laboratory setting.

Materials:

- **TCTU**
- Solvents: Dimethylformamide (DMF), N-Methyl-2-pyrrolidone (NMP), Dimethyl sulfoxide (DMSO), Acetonitrile
- Small test tubes

© 2026 BenchChem. All rights reserved.

- Vortex mixer
- Spatula

Procedure:[16][17][18][19][20]

- Add approximately 10 mg of **TCTU** to a small, dry test tube.
- Add 0.5 mL of the selected solvent to the test tube.
- Vortex the mixture for 30 seconds.
- Observe the solution. If the solid has completely dissolved, the compound is soluble.
- If the solid has not completely dissolved, add another 0.5 mL of the solvent and vortex again.
- If the solid dissolves, it is sparingly soluble. If it remains undissolved, it is considered insoluble.
- Repeat for each solvent.

## OECD 423: Acute Oral Toxicity - Acute Toxic Class Method

Objective: To determine the acute oral toxicity of a substance.[21][22][23][24][25]

Principle: This method involves a stepwise procedure with the use of a limited number of animals per step. The outcome of each step determines the dose for the next step. The method allows for the classification of the substance into one of several toxicity classes.

Animal Model: Typically, female rats are used.

Procedure:

- A starting dose of 300 mg/kg body weight is typically used. A group of three fasted female rats is dosed with the test substance.
- The animals are observed for mortality and clinical signs of toxicity for up to 14 days.

© 2026 BenchChem. All rights reserved.

- If no mortality is observed, a higher dose (e.g., 2000 mg/kg) is administered to another group of three rats.
- If mortality is observed, the test is repeated at a lower dose level with another group of animals.
- The LD50 is estimated based on the mortality data and the substance is classified according to the Globally Harmonized System (GHS).

## OECD 404: Acute Dermal Irritation/Corrosion

Objective: To assess the potential of a substance to cause skin irritation or corrosion.[26][27][28][29][30]

Principle: The substance is applied to the skin of a single animal in a stepwise manner.

Animal Model: Albino rabbit.

Procedure:

- A small area of the animal's back is clipped free of fur.
- 0.5 mL (for liquids) or 0.5 g (for solids, moistened with a suitable vehicle) of the test substance is applied to the skin under a gauze patch.
- The patch is left in place for 4 hours.
- After removal of the patch, the skin is observed for erythema (redness) and edema (swelling) at 1, 24, 48, and 72 hours, and up to 14 days.
- The severity of the skin reactions is scored according to a standardized scale.
- If a corrosive effect is observed in the first animal, no further testing is necessary. If no corrosive effect is seen, the test is confirmed in up to two additional animals.

## OECD 405: Acute Eye Irritation/Corrosion

© 2026 BenchChem. All rights reserved.

Objective: To determine the potential of a substance to cause eye irritation or corrosion.[31][32][33][34][35]

Principle: The test substance is instilled into the conjunctival sac of one eye of a single animal.

Animal Model: Albino rabbit.

Procedure:

- A single dose of the test substance (0.1 mL for liquids or 0.1 g for solids) is instilled into the conjunctival sac of one eye. The other eye serves as a control.
- The eyes are examined for corneal opacity, iris lesions, and conjunctival redness and swelling at 1, 24, 48, and 72 hours, and up to 21 days.
- The severity of the eye reactions is scored.
- If a corrosive effect is observed in the first animal, the test is terminated. If not, the response is confirmed in up to two additional animals.

# Mechanism of Action and Experimental Workflows

## Mechanism of Amide Bond Formation

**TCTU**, like other uronium/aminium-based coupling reagents, facilitates amide bond formation by activating a carboxylic acid. The generally accepted mechanism involves the formation of a highly reactive acyl-isourea intermediate, which is then susceptible to nucleophilic attack by an amine to form the stable amide bond.

© 2026 BenchChem. All rights reserved.

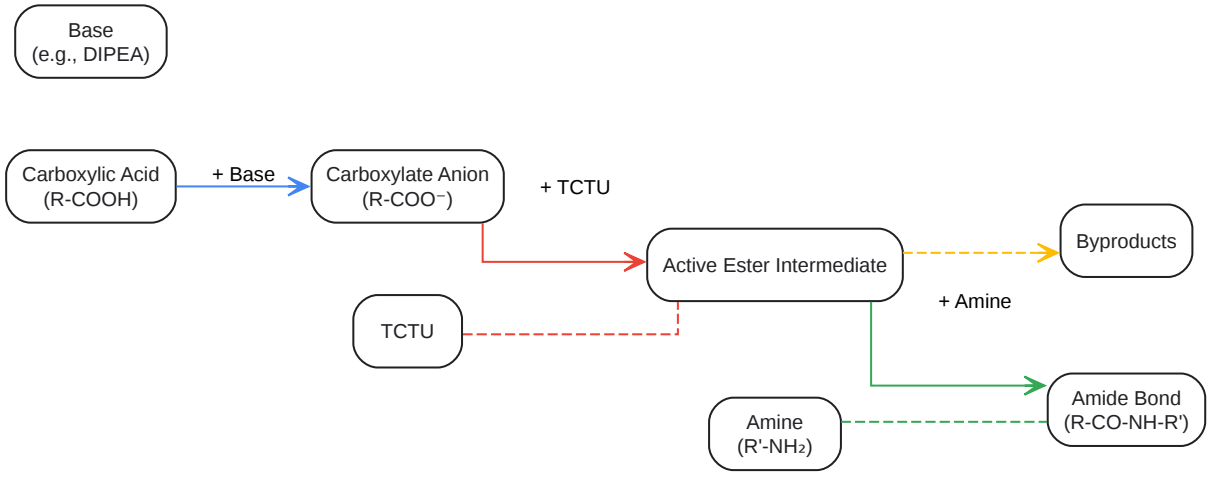


Click to download full resolution via product page

Caption: General mechanism of **TCTU**-mediated amide bond formation.

## Experimental Workflow for Toxicity Assessment

A logical workflow for assessing the potential toxicity of a new or poorly characterized chemical reagent like **TCTU** involves a tiered approach, starting with in silico and in vitro methods before proceeding to in vivo studies if necessary.

© 2026 BenchChem. All rights reserved.

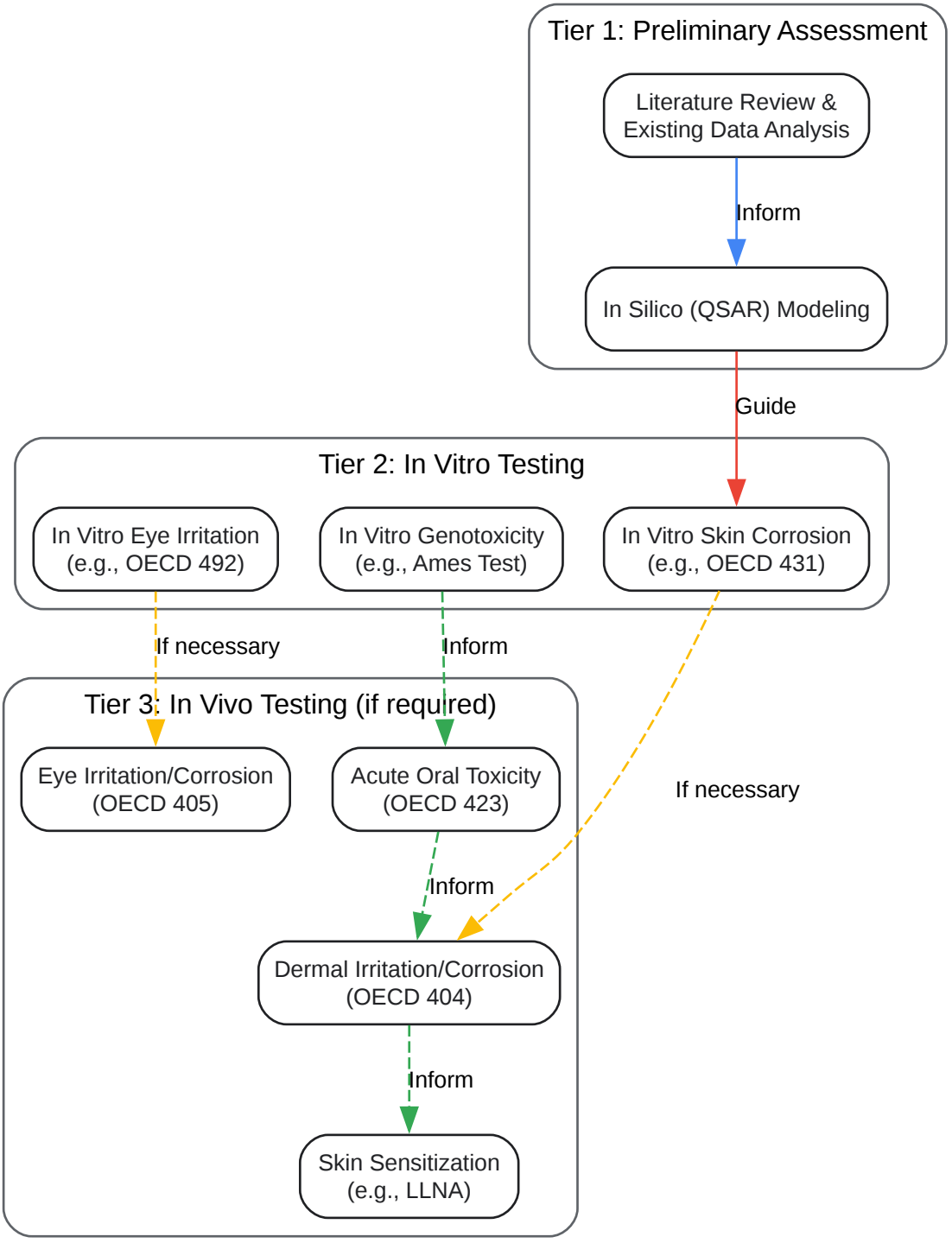


Click to download full resolution via product page

Caption: Tiered experimental workflow for chemical toxicity assessment.

## Conclusion

© 2026 BenchChem. All rights reserved.

**TCTU** is a valuable reagent in chemical synthesis, but its handling requires a thorough understanding of its potential hazards. While specific toxicological data for **TCTU** is limited, information from structurally related compounds highlights the risks of irritation and, most importantly, allergic sensitization. Adherence to strict safety protocols, including the use of appropriate personal protective equipment and engineering controls, is essential to minimize exposure and ensure a safe laboratory environment. The experimental protocols outlined in this guide provide a framework for the systematic evaluation of the safety of **TCTU** and other new chemical entities.

***Need Custom Synthesis?***

*BenchChem offers custom synthesis for rare earth carbides and specific isotopiclabeling.*

*Email: info@benchchem.com or Request Quote Online.*

## References

- 1. HBTU - Wikipedia [en.wikipedia.org]
- 2. peptide.com [peptide.com]
- 3. luxembourg-bio.com [luxembourg-bio.com]
- 4. HCTU O-(1H-6-Chlorobenzotriazole-1-yl)-1,1,3,3-tetramethyluronium hexafluorophosphate Novabiochem 330645-87-9 [sigmaaldrich.com]
- 5. HBTU | 94790-37-1 [chemicalbook.com]
- 6. Uronium peptide coupling agents: Another case of occupational airborne allergic sensitization induced by HBTU - PMC [pmc.ncbi.nlm.nih.gov]
- 7. Uronium peptide coupling agents: Another case of occupational airborne allergic sensitization induced by HBTU - PubMed [pubmed.ncbi.nlm.nih.gov]
- 8. oxfordlabfinechem.com [oxfordlabfinechem.com]
- 9. science.uct.ac.za [science.uct.ac.za]
- 10. Anaphylaxis Induced by Peptide Coupling Agents – ACS Chemical Health and Safety Division [dchas.org]
- 11. researchgate.net [researchgate.net]
- 12. An Evaluation of the Occupational Health Hazards of Peptide Couplers - PMC [pmc.ncbi.nlm.nih.gov]

© 2026 BenchChem. All rights reserved.

- 13. pubs.acs.org [pubs.acs.org]
- 14. lobachemie.com [lobachemie.com]
- 15. cdhfinechemical.com [cdhfinechemical.com]
- 16. scribd.com [scribd.com]
- 17. uomustansiriyah.edu.iq [uomustansiriyah.edu.iq]
- 18. m.youtube.com [m.youtube.com]
- 19. uomustansiriyah.edu.iq [uomustansiriyah.edu.iq]
- 20. www1.udel.edu [www1.udel.edu]
- 21. OECD Guideline For Acute oral toxicity (TG 423) | PPTX [slideshare.net]
- 22. oecd.org [oecd.org]
- 23. researchgate.net [researchgate.net]
- 24. oecd.org [oecd.org]
- 25. scribd.com [scribd.com]
- 26. oecd.org [oecd.org]
- 27. oecd.org [oecd.org]
- 28. catalog.labcorp.com [catalog.labcorp.com]
- 29. Acute Dermal Irritation OECD 404 - Altogen Labs [altogenlabs.com]
- 30. nucro-technics.com [nucro-technics.com]
- 31. oecd.org [oecd.org]
- 32. oecd.org [oecd.org]
- 33. nucro-technics.com [nucro-technics.com]
- 34. ACUTE EYE IRRITATION OECD GUIDELINE BY SEJAL AGRAWAL | PPTX [slideshare.net]
- 35. ntp.niehs.nih.gov [ntp.niehs.nih.gov]


- To cite this document: BenchChem. [TCTU: A Comprehensive Technical Guide to Safety and Handling]. BenchChem, [2026]. [Online PDF]. Available at: [https://www.benchchem.com/product/b7725894/docs#tctu-a-comprehensive-technical-guide-to-safety-and-handling]

---

**Disclaimer & Data Validity:**

© 2026 BenchChem. All rights reserved.

The information provided in this document is for Research Use Only (RUO) and is strictly not intended for diagnostic or therapeutic procedures. While BenchChem strives to provide accurate protocols, we make no warranties, express or implied, regarding the fitness of this product for every specific experimental setup.

**Technical Support:**The protocols provided are for reference purposes. Unsure if this reagent suits your experiment?

**Need Industrial/Bulk Grade?** Request Custom Synthesis Quote

# BenchChem

Our mission is to be the trusted global source of essential and advanced chemicals, empowering scientists and researchers to drive progress in science and industry.

Contact

Address: 3281 E Guasti Rd

Ontario, CA 91761, United States

Phone: (601) 213-4426

Email: info@benchchem.com

Contact our Ph.D. Support Team for a compatibility check

© 2026 BenchChem. All rights reserved.