Technical Support Center: Doping Effects on $Bi_2Ti_2O_7$ Properties

Author: BenchChem Technical Support Team. **Date**: May 2026

Compound of Interest

Compound Name:	*Bismuth titanium oxide (Bi2Ti2O7)*
CAS No.:	*11115-71-2*
Cat. No.:	*B077052*

Get Quote

Welcome to the technical resource center for researchers working with Bismuth Titanate ($Bi_2Ti_2O_7$). This guide is designed to address specific experimental and theoretical questions you may encounter when doping this fascinating pyrochlore material. Our goal is to provide not just protocols, but the underlying scientific reasoning to help you make informed decisions in your research.

Section 1: Fundamentals of the $Bi_2Ti_2O_7$ System

This section covers baseline knowledge essential for any experimental work involving $Bi_2Ti_2O_7$.

Q1: What is $Bi_2Ti_2O_7$ and why is it structurally sensitive?

Bismuth Titanate, $Bi_2Ti_2O_7$, is a ceramic material belonging to the pyrochlore family of oxides, which have the general formula $A_2B_2O_7$. In this case, A is Bismuth (Bi^{3+}) and B is Titanium (Ti^{4+}). The pyrochlore structure can be visualized as two interpenetrating networks: a B_2O_6 framework of corner-sharing octahedra and an A_2O' tetrahedral sublattice.[1] This unique arrangement gives rise to interesting dielectric and photocatalytic properties.[2]

© 2026 BenchChem. All rights reserved.

The primary experimental challenge is the material's thermal instability. Pure, stoichiometric $Bi_2Ti_2O_7$ is a metastable phase.[3] During synthesis, especially at temperatures above 650°C, it has a strong tendency to decompose into more stable secondary phases, most commonly the Aurivillius phase $Bi_4Ti_3O_{12}$ or $Bi_2Ti_4O_{11}$.[3][4] Achieving a phase-pure sample requires very precise temperature control during calcination.[1]

Q2: I'm struggling with phase purity during synthesis. Why do I keep getting $Bi_4Ti_3O_{12}$ as an impurity?

This is the most common issue faced by researchers. The formation of the $Bi_4Ti_3O_{12}$ impurity is a thermodynamically driven process. The pyrochlore phase of $Bi_2Ti_2O_7$ exists in a very narrow temperature window.[1] If your calcination temperature is too high, even by a small margin, or the heating duration is too long, the system will favor the formation of the more stable Aurivillius phase.[1][4]

Causality: The Bi_2O_3-TiO_2 phase diagram shows that $Bi_4Ti_3O_{12}$ is a stable compound at higher temperatures where pyrochlore is not. Therefore, any deviation from optimal synthesis conditions (temperature, stoichiometry, heating rate) can easily lead to its formation. Doping is a key strategy employed to expand the thermal stability window of the pyrochlore phase.[4][5]

Section 2: Doping Strategies and Mechanisms

Doping is the primary method to tune the properties of $Bi_2Ti_2O_7$ and enhance its stability. Understanding the fundamentals is key to successful experimentation.

Q1: What is the difference between A-site and B-site doping in the $Bi_2Ti_2O_7$ pyrochlore structure?

The distinction lies in which cation is being substituted by the dopant ion.

- A-site Doping: The dopant ion replaces the Bi^{3+} cation. This site is typically occupied by larger ions. Common A-site dopants include rare-earth elements like Lanthanum (La^{3+}) or other metals like Scandium (Sc^{3+}) and Indium (In^{3+}).[1][5]

- B-site Doping: The dopant ion replaces the Ti^{4+} cation within the octahedral framework. This site is occupied by smaller, highly charged ions. Transition metals are often considered for B-site substitution.

© 2026 BenchChem. All rights reserved.

The flexibility of the pyrochlore crystal structure allows for substitutions in both sublattices, which can be leveraged to obtain compounds with tailored physicochemical properties.[1] Some studies suggest that certain transition metals may preferentially substitute at the A-site due to coordination stability.[6]

Caption: A-site vs. B-site doping in the $A_2B_2O_7$ pyrochlore structure.

Q2: How does doping enhance photocatalytic activity?

Undoped $Bi_2Ti_2O_7$ has a relatively wide band gap, limiting its absorption primarily to the UV region. Doping enhances photocatalytic activity, particularly under visible light, through two primary mechanisms:

- Band Gap Engineering: Incorporating dopant ions into the $Bi_2Ti_2O_7$ lattice can create new energy levels within the forbidden band gap.[7] This effectively narrows the band gap, allowing the material to absorb lower-energy photons from the visible light spectrum.[7]
- Improved Charge Separation: The dopant sites can act as traps for photogenerated electrons or holes. This spatial separation of charges significantly reduces the electron-hole recombination rate, which is a major limiting factor for photocatalytic efficiency. By increasing the lifetime of the charge carriers, more electrons and holes are available to participate in redox reactions on the catalyst's surface.[8]

© 2026 BenchChem. All rights reserved.

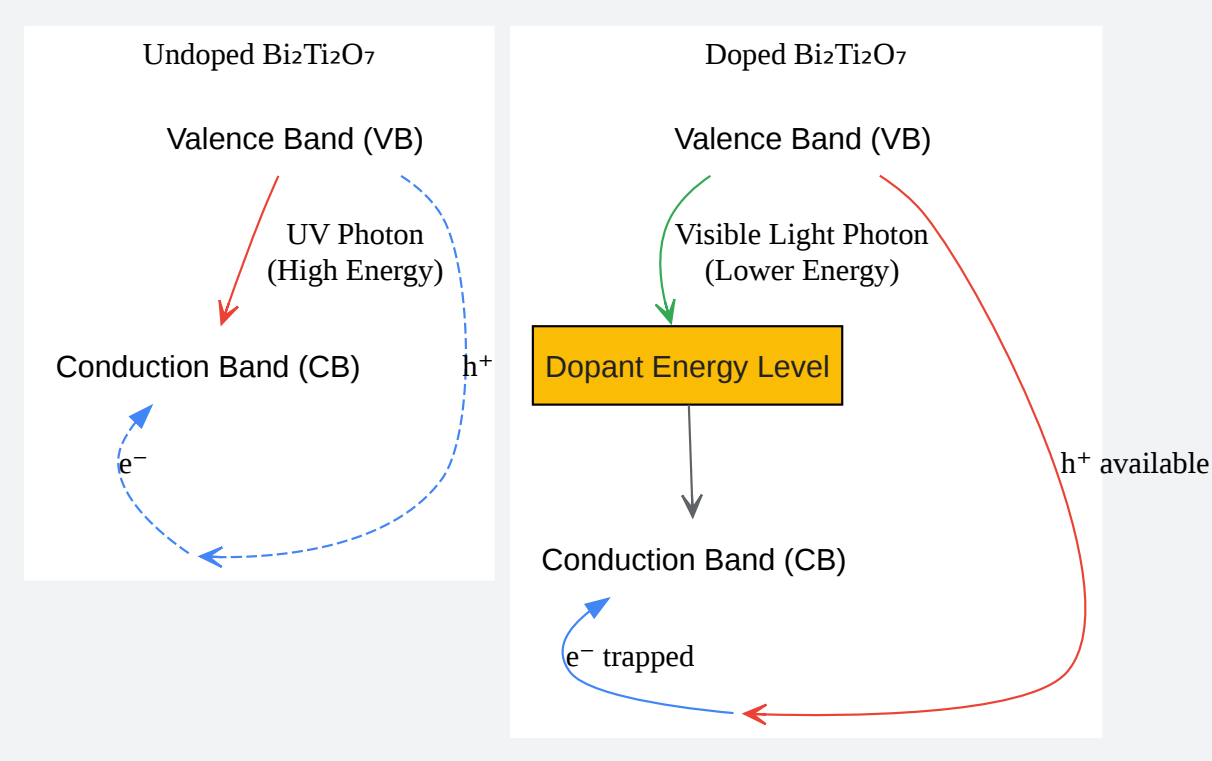

Click to download full resolution via product page

Caption: Effect of doping on the electronic band structure and charge separation.

Section 3: Impact of Doping on Key Properties

This section provides specific data and insights into how different dopants modify the material's performance.

Q1: Which transition metals are effective for enhancing photocatalysis and what kind of performance increase can I expect?

Doping with transition metals like Nickel (Ni), Cobalt (Co), and Iron (Fe) has been shown to significantly boost photocatalytic performance.[8] These dopants modify the electronic structure and improve charge carrier dynamics.[8]

A systematic study on the degradation of Bisphenol A (BPA) yielded the following results:

© 2026 BenchChem. All rights reserved.

- Ni-doped $Bi_2Ti_2O_7$: Exhibited the highest efficiency, achieving approximately 61% degradation of BPA. This was attributed to an optimal band gap and superior electron-hole separation.[8]
- Fe-doped $Bi_2Ti_2O_7$: Showed the next highest activity with 55% BPA degradation.[8]
- Co-doped $Bi_2Ti_2O_7$: Resulted in 52% degradation of BPA.[8]

Key Takeaway: The choice and concentration of the transition metal dopant are critical. There is an optimal concentration (often low, e.g., 0.1-0.2 mol%) to maximize efficiency without introducing an excess of recombination centers.[6][8]

Q2: How does Lanthanum (La) doping affect the properties of bismuth titanate compounds?

Lanthanum (La^{3+}) is a common A-site dopant used to improve the dielectric and ferroelectric properties of bismuth titanate materials. Its primary role is to stabilize the crystal structure and reduce defects.

In related bismuth-layer-structured ferroelectrics (e.g., $SrBi_4Ti_4O_{15}$), La^{3+} doping has been shown to:

- Reduce Oxygen Vacancies: La^{3+} substitution can suppress the formation of oxygen vacancies, which are detrimental to ferroelectric performance.[9]
- Improve Polarization: By reducing defects, La-doping can lead to significantly improved remnant polarization in the material.[9][10]
- Influence Site Occupancy: At low concentrations, La^{3+} ions tend to occupy the A-site within the perovskite blocks, while at higher concentrations, they may also be incorporated into the (Bi_2O_2) layers.[10]

© 2026 BenchChem. All rights reserved.

Dopant	Host Material	Dopant Conc. (mol%)	Primary Effect	Observed Result	Reference
Nickel (Ni)	$Bi_2Ti_2O_7$	0.1 - 0.2	Photocatalysis Enhancement	~61% degradation of Bisphenol A (BPA)	[8]
Iron (Fe)	$Bi_2Ti_2O_7$	0.1 - 0.2	Photocatalysis Enhancement	~55% degradation of Bisphenol A (BPA)	[8]
Cobalt (Co)	$Bi_2Ti_2O_7$	0.1 - 0.2	Photocatalysis Enhancement	~52% degradation of Bisphenol A (BPA)	[8]
Lanthanum (La)	$SrBi_4Ti_4O_{15}$	0.10 - 0.25	Ferroelectric Improvement	Increased remnant polarization (2Pr) by ~50%	[10]
Scandium (Sc)	$Bi_2Ti_2O_7$	0.2 - 0.6	Thermal & Structural Stability	Stabilizes pyrochlore phase up to melting temp.	[5]

Section 4: Experimental Protocols & Workflows

A reliable synthesis protocol is the foundation of reproducible results. Here, we provide a generalized workflow for a common chemical synthesis route.

Recommended Protocol: Sol-Gel Synthesis of Doped $Bi_2Ti_2O_7$

The sol-gel method is widely used as it offers excellent stoichiometric control and produces homogenous, nano-sized particles.[3]

© 2026 BenchChem. All rights reserved.

Step-by-Step Methodology:

- Precursor Solution A (Bismuth & Dopant):
  - Measure stoichiometric amounts of Bismuth (III) nitrate pentahydrate ($Bi(NO_3)_3 \cdot 5H_2O$) and the dopant precursor (e.g., Nickel(II) acetate, Lanthanum(III) nitrate).
  - Dissolve the precursors in a suitable solvent, such as 2-methoxyethanol or dilute nitric acid.
  - Add a chelating agent, like citric acid, in a 1:1 molar ratio to the total metal ions.[3] Stir until a clear solution is formed. This step is critical to prevent premature precipitation.
- Precursor Solution B (Titanium):
  - In a separate vessel, dissolve Titanium (IV) isopropoxide (TTIP) or tetrabutyl titanate in the same solvent.
  - Stir vigorously. This solution can be highly reactive with atmospheric moisture, so handling under an inert atmosphere is recommended if possible.
- Sol Formation:
  - Slowly add the Titanium solution (Solution B) dropwise into the Bismuth/Dopant solution (Solution A) under continuous, vigorous stirring.
  - Continue stirring the mixture for several hours (e.g., 2-4 hours) at room temperature to form a stable and homogenous sol.
- Gelation:
  - Gently heat the sol on a hotplate (e.g., 60-80°C) while stirring. This will evaporate the solvent and promote polymerization, leading to the formation of a viscous gel.
- Drying & Grinding:
  - Dry the gel in an oven at a low temperature (e.g., 100-120°C) for 12-24 hours to remove residual solvent and form a solid precursor powder (xerogel).

© 2026 BenchChem. All rights reserved.

- Thoroughly grind the dried xerogel into a fine powder using an agate mortar and pestle. This ensures uniform heating during calcination.

- Calcination:
  - Place the ground powder in an alumina crucible and transfer to a muffle furnace.
  - Heat the powder to the target temperature (e.g., 550-650°C). This is the most critical step. The optimal temperature will depend on the dopant and its concentration. A temperature ramp (e.g., 2-5°C/min) is recommended.
  - Hold at the target temperature for 2-4 hours to ensure complete crystallization into the pyrochlore phase.
  - Allow the furnace to cool down to room temperature naturally.
- Characterization:
  - Analyze the final powder using X-ray Diffraction (XRD) to confirm phase purity and crystal structure. Use Scanning Electron Microscopy (SEM) for morphology and UV-Vis Spectroscopy for optical properties.

© 2026 BenchChem. All rights reserved.

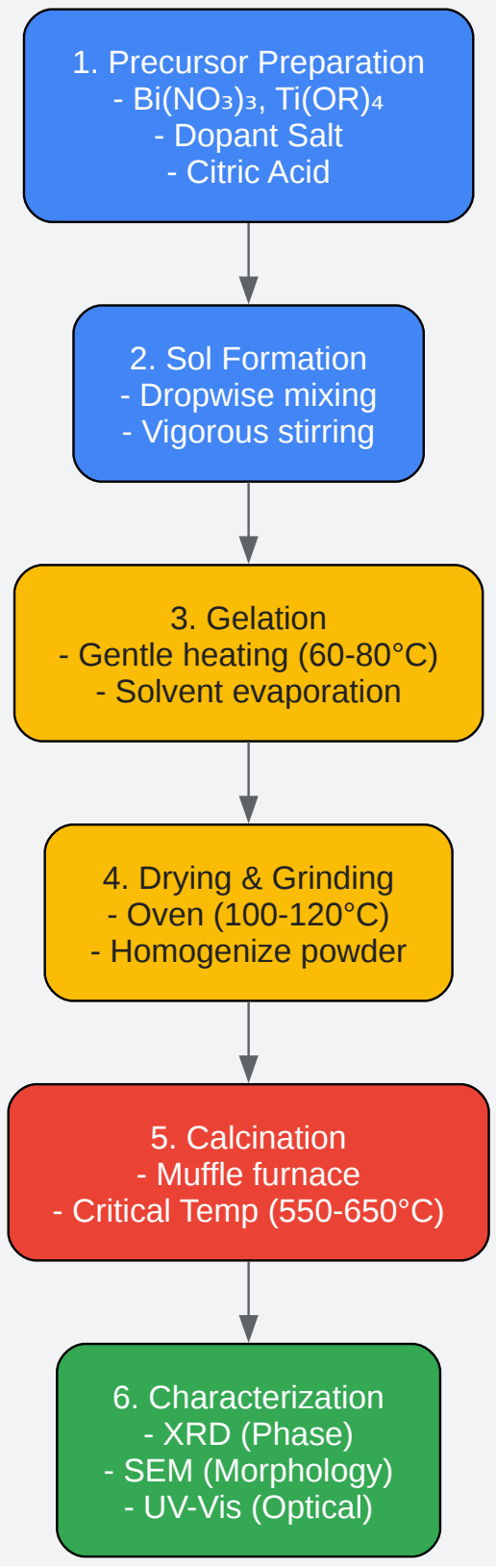

Click to download full resolution via product page

Caption: Standard workflow for sol-gel synthesis and characterization of doped $Bi_2Ti_2O_7$.

© 2026 BenchChem. All rights reserved.

Section 5: Troubleshooting Common Experimental Issues

Q1: My XRD pattern shows a mix of pyrochlore and other phases even after doping. What went wrong?

Even with stabilizing dopants, phase purity can be elusive. Consider these factors:

- Incorrect Calcination Temperature: Doping widens the stability window but doesn't eliminate it. You may need to perform a temperature-dependent study (e.g., calcining small batches at 550°C, 600°C, 650°C, 700°C) to find the new optimal temperature for your specific dopant and concentration. Temperatures below 550°C may result in an amorphous phase, while temperatures above 650-700°C can still lead to decomposition.[4]

- Dopant Solubility Limit: Every dopant has a solubility limit in the host lattice. If you exceed this limit, the excess dopant will precipitate out as a separate secondary phase (e.g., $La_2Ti_2O_7$).[4] Review the literature for the known solubility of your chosen dopant in the $Bi_2Ti_2O_7$ system.

- Inhomogeneous Precursor Mixture: If the initial sol was not perfectly homogenous, you will have localized regions with incorrect stoichiometry. This can lead to the formation of multiple phases during calcination. Ensure vigorous and prolonged stirring during the sol formation step.

Q2: I successfully synthesized a phase-pure doped sample, but its photocatalytic activity is lower than expected. Why?

This is a common scenario where structural success doesn't translate to functional success. The cause is often related to defects or exceeding the optimal dopant level.

- Dopants as Recombination Centers: While dopants can trap charges to prevent recombination, adding too many creates an opposite effect. A high concentration of dopant sites can act as recombination centers, where electrons and holes meet and annihilate before they can react. There is an optimal dopant concentration that balances light absorption and charge separation.[6]

© 2026 BenchChem. All rights reserved.

- Surface Contamination: Ensure the material is thoroughly washed after synthesis to remove any residual organic or inorganic species from the precursors that could inhibit surface reactions.

- Particle Agglomeration: Highly agglomerated nanoparticles can have a reduced effective surface area, limiting the number of active sites available for catalysis. Consider post-synthesis sonication or adjusting synthesis parameters to achieve better particle dispersion.

References

- Wu, M. C., Chang, Y. H., & Lin, T. H. (2017). Bismuth doping effect on crystal structure and photodegradation activity of Bi-TiO_2 nanoparticles. Japanese Journal of Applied Physics, 56(4), 04CJ01. [Link]

- (Reference details to be added based on full paper access) Effect of Transition-Metal Doping in Bismuth Titanate Nanostructures for Enhancing the Photocatalytic Efficiency. ACS Publications.

- Wu, M. C., Chang, Y. H., & Lin, T. H. (2017). Bismuth doping effect on crystal structure and photodegradation activity of Bi-TiO_2 nanoparticles. Chang Gung University Academic Achievements Collection.[Link]

- Al-Ghamdi, A. A., Al-Hartomy, O. A., El-Mossalamy, E. H., & Al-Ghamdi, A. A. (2020). Effect of bismuth doping on the crystal structure and photocatalytic activity of titanium oxide. RSC Advances, 10(45), 26863-26872. [Link]

- Supriya, S. (2025). Review–Design and Doping Strategies of $Bi_2Ti_2O_7$ Pyrochlores for Elevating Dielectric Properties. ResearchGate.[Link]

- Mayfield, C. (2016). Red Shifted Absorbance of A-site Substituted Bismuth Titanate Pyrochlore: Characterization and Stability Analysis from First Principles. ResearchGate.[Link]

- (Reference details to be added based on full paper access) Sol–Gel Processing of $Bi_2Ti_2O_7$ and $Bi_2Ti_4O_{11}$ Films with Photocatalytic Activity. ResearchGate.
- (Reference details to be added based on full paper access) Effect of bismuth doping on the crystal structure and photocatalytic activity of titanium oxide. RSC Publishing.

© 2026 BenchChem. All rights reserved.

- Esquivel-Elizondo, J., Hinojosa, B. B., & Nino, J. C. (2011). $Bi_2Ti_2O_7$: It Is Not What You Have Read. Chemistry of Materials, 23(22), 4965-4974. [Link]
- Hector, A. L., & Wiggin, S. B. (2004). Synthesis and Structural Study of Stoichiometric $Bi_2Ti_2O_7$ Pyrochlore. Journal of Solid State Chemistry, 177(1), 139-145.
- (Reference details to be added based on full paper access) Metal Bi Loaded $Bi_2Ti_2O_7/CaTiO_3$ for Enhanced Photocatalytic Efficiency for NO Removal under Visible Light. MDPI.
- Chen, Y. C., Hsieh, C. F., & Chen, Y. C. (2005). Preparation and Characterization of $Bi_2Ti_2O_7$ Microwave Dielectric Ceramics by Citrate Sol-Gel Method. Journal of Sol-Gel Science and Technology, 33(3), 275-280.
- Chen, Y. C., & Hsieh, C. F. (2004). Synthesis, phase transformation and dielectric properties of sol-gel derived $Bi_2Ti_2O_7$ ceramics. Journal of Materials Science, 39(12), 4067-4070.
- (Reference details to be added based on full paper access) $Bi_2Ti_2O_7$-based pyrochlore nanoparticles and their superior photocatalytic activity under visible light. ResearchGate.
- Yusoff, M. M., & Kumar, G. S. (2018). A study on structural stability of bismuth titanate with lanthanum doping for improved ferroelectric properties. Journal of Materials Science: Materials in Electronics, 29(14), 11988-11997. [Link]
- Jasim, K. (2012). Structure and electrical properties of lanthanum doped $Bi_2Sr_2Ca_2$-$xLaxCu_3O_{10+\delta}$ superconductor. Turkish Journal of Physics, 36, 245-251. [Link]
- Wang, Y., Li, J., Zhang, Y., & Zhang, G. (2018). Preparation and Characterization of $Bi_2Ti_2O_7$ Pyrochlore by Acetone Solvothermal Method. Journal of Nanoscience and Nanotechnology, 18(12), 8360-8366. [Link]
- Astuti, Y., Muslim, A., & Darmawan, A. (2026). Tailoring Photocatalytic Activity of Sol-Gel-Derived Bismuth Oxide via Calcination Time Optimization. Bulletin of Chemical Reaction Engineering & Catalysis, 21(1), 20. [Link]
- Ilie, A., Predoană, L., Anastasescu, C., Preda, S., Hosu, I. S., Costescu, R. M., ... & Zaharescu, M. (2025). Layered Perovskite $La_2Ti_2O_7$ Obtained by Sol–Gel Method with Photocatalytic Activity. Applied Sciences.
- Piir, I. V., Koroleva, M. S., Ryabkov, Y. I., Kellerman, D. G., & Vovkotrub, E. G. (2016). Synthesis and properties of Bi_2-yMxTi$_2O_7$-δ (M - Sc, In) pyrochlores. ResearchGate.[Link]

© 2026 BenchChem. All rights reserved.

- Wang, Y. B., & Wang, Y. (2007). Study on Properties of Lanthanum Doped $SrBi_4Ti_4O_{15}$ and $Sr_2Bi_4Ti_5O_{18}$ Ferroelectric Ceramics. Ferroelectrics, 355(1), 164-171.
- Sandhya, C., & Rao, B. S. (2022). Photoluminescence Properties of Bi^{3+} and Dy^{3+} doped $La_2Zr_2O_7$ Phosphors. Physical Chemistry Research, 10(2), 227-238. [Link]

Need Custom Synthesis?

BenchChem offers custom synthesis for rare earth carbides and specific isotopiclabeling.

Email: info@benchchem.com or Request Quote Online.

Sources

- 1. researchgate.net [researchgate.net]
- 2. researchgate.net [researchgate.net]
- 3. researchgate.net [researchgate.net]
- 4. researchgate.net [researchgate.net]
- 5. researchgate.net [researchgate.net]
- 6. researchgate.net [researchgate.net]
- 7. Effect of bismuth doping on the crystal structure and photocatalytic activity of titanium oxide - PMC [pmc.ncbi.nlm.nih.gov]
- 8. publicatio.bibl.u-szeged.hu [publicatio.bibl.u-szeged.hu]
- 9. A study on structural stability of bismuth titanate with lanthanum doping for improved ferroelectric properties | Semantic Scholar [semanticscholar.org]
- 10. researchgate.net [researchgate.net]
- To cite this document: BenchChem. [Technical Support Center: Doping Effects on $Bi_2Ti_2O_7$ Properties]. BenchChem, [2026]. [Online PDF]. Available at: [https://www.benchchem.com/product/b077052/docs#technical-support-center-doping-effects-on-bi-ti-o-properties]

Disclaimer & Data Validity:

The information provided in this document is for Research Use Only (RUO) and is strictly not intended for diagnostic or therapeutic procedures. While BenchChem strives to provide accurate protocols, we make no warranties, express or implied, regarding the fitness of this product for every specific experimental setup.

Technical Support: The protocols provided are for reference purposes. Unsure if this reagent suits your experiment?

Need Industrial/Bulk Grade? Request Custom Synthesis Quote

BenchChem

Our mission is to be the trusted global source of essential and advanced chemicals, empowering scientists and researchers to drive progress in science and industry.

Contact

Address: 3281 E Guasti Rd

Ontario, CA 91761, United States

Phone: (601) 213-4426

Email: info@benchchem.com

Contact our Ph.D. Support Team for a compatibility check

© 2026 BenchChem. All rights reserved.