Technical Support Center: Scale-Up Synthesis of 2-(2-Phenylethynyl)pyridine

Author: BenchChem Technical Support Team. **Date**: May 2026

Compound of Interest	
Compound Name:	*2-(2-Phenylethynyl)pyridine*
CAS No.:	*13141-42-9*
Cat. No.:	*B076701*

Get Quote

Introduction: Bridging the Gap from Bench to Bulk

Welcome to the Technical Support Center for the synthesis of **2-(2-Phenylethynyl)pyridine**. This molecule is a crucial building block and key intermediate in the development of pharmaceuticals, particularly as a scaffold for metabotropic glutamate receptor 5 (mGluR5) antagonists like MPEP (2-Methyl-6-(phenylethynyl)pyridine). While its synthesis via the Sonogashira cross-coupling reaction is well-established in academic literature, transitioning from milligram-scale lab syntheses to multi-kilogram production presents a distinct set of challenges.

This guide is designed for researchers, process chemists, and drug development professionals. It moves beyond simple procedural lists to provide a deeper understanding of the reaction's nuances, offering robust troubleshooting strategies and addressing the critical questions that arise during scale-up. Our goal is to empower you to anticipate, diagnose, and resolve issues, ensuring a safe, efficient, and reproducible synthesis at scale.

© 2026 BenchChem. All rights reserved.

Section 1: Recommended Scale-Up Synthesis Protocol

The Sonogashira coupling is the most direct and widely employed method for forming the C(sp^2)-C(sp) bond between the pyridine ring and the phenylacetylene moiety. The following protocol has been optimized for scalability, focusing on catalyst efficiency, byproduct minimization, and a purification procedure that avoids column chromatography.

Reaction Scheme

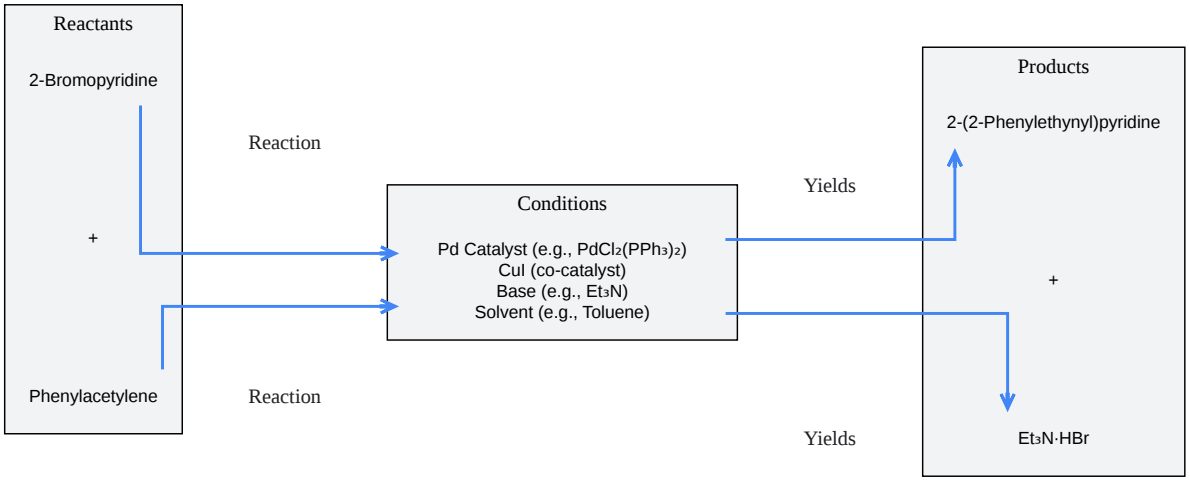

Click to download full resolution via product page

Caption: General Sonogashira coupling for **2-(2-Phenylethynyl)pyridine** synthesis.

Step-by-Step Methodology

© 2026 BenchChem. All rights reserved.

Safety First: This procedure involves flammable liquids, potentially toxic materials, and requires an inert atmosphere. Phenylacetylene is a flammable liquid, and pyridine derivatives can be harmful. All operations must be conducted in a well-ventilated fume hood with appropriate personal protective equipment (PPE), including safety glasses, flame-retardant lab coat, and gloves.

- Vessel Preparation: To a clean, dry, appropriately sized reactor equipped with a mechanical stirrer, condenser, thermocouple, and nitrogen inlet/outlet, add 2-bromopyridine (1.0 eq) and degassed toluene (5-10 volumes relative to 2-bromopyridine).
- Inerting: Begin stirring and thoroughly degas the mixture by bubbling nitrogen through the solution for at least 30 minutes. Maintaining a positive nitrogen pressure is critical throughout the reaction to prevent oxygen ingress, which promotes the undesirable homocoupling of phenylacetylene (Glaser coupling).
- Catalyst and Base Addition: Add triphenylphosphine (PPh_3, 0.04 eq), bis(triphenylphosphine)palladium(II) dichloride ($PdCl_2(PPh_3)_2$, 0.02 eq), and copper(I) iodide (CuI, 0.01 eq). Follow with the addition of triethylamine (Et_3N, 2.5 eq). The amine serves as the base to neutralize the HBr byproduct and can also act as a ligand and solvent.
- Heating: Heat the reaction mixture to 70-80°C. A mild exotherm may be observed upon addition of the alkyne.
- Substrate Addition: Slowly add phenylacetylene (1.1 eq) via a syringe pump over 1-2 hours. Causality Note: Slow addition is crucial on a larger scale to control the reaction exotherm and to maintain a low concentration of free phenylacetylene, which significantly suppresses the formation of the 1,4-diphenylbuta-1,3-diyne byproduct.
- Reaction Monitoring: Monitor the reaction progress by TLC, GC, or HPLC until consumption of the 2-bromopyridine is complete (typically 4-8 hours).
- Work-up:
  - Cool the reaction mixture to room temperature.
  - Filter the mixture through a pad of celite to remove precipitated salts and catalyst residues. Wash the pad with toluene.

© 2026 BenchChem. All rights reserved.

- Transfer the filtrate to a separatory funnel and wash sequentially with 5% aqueous ammonia solution (to remove residual copper salts), water, and brine.
- Dry the organic layer over anhydrous sodium sulfate (Na_2SO_4), filter, and concentrate under reduced pressure to yield the crude product.

- Purification (Non-Chromatographic):
  - Dissolve the crude oil in a minimal amount of a hot non-polar solvent like heptane or hexane.
  - Allow the solution to cool slowly to room temperature, then cool further to 0-5°C to induce crystallization.
  - Collect the solid product by filtration, wash with cold solvent, and dry under vacuum to afford **2-(2-Phenylethynyl)pyridine** as a crystalline solid.

Key Process Parameters (Table)

© 2026 BenchChem. All rights reserved.

Parameter	Lab Scale (1-10g)	Pilot Scale (1-10kg)	Rationale & Key Considerations
2-Halopyridine	2-Iodopyridine	2-Bromopyridine	2-Iodopyridine is more reactive but significantly more expensive. 2-Bromopyridine offers a better cost-performance balance for scale-up. 2-Chloropyridine is cheapest but often requires more forcing conditions and specialized catalysts.
Pd Catalyst Loading	1-5 mol%	0.5-2 mol%	Catalyst cost is a major driver at scale. Lowering loading is critical. However, too low a loading can lead to incomplete conversion and catalyst decomposition.
Cu(I) Co-catalyst	1-2 mol%	0.5-1 mol%	Essential for high reaction rates at lower temperatures. However, it promotes Glaser homocoupling and complicates purification. Consider copper-free systems if metal contamination is a major concern.

© 2026 BenchChem. All rights reserved.

Solvent Volume	10-20 volumes	5-8 volumes	Higher concentrations improve reactor throughput but can pose challenges for mixing and heat dissipation. The final concentration must be balanced for both reaction kinetics and process safety.
Addition Time	5-15 minutes	1-3 hours	Critical for controlling exotherms and minimizing byproduct formation on a large scale.
Purification	Column Chromatography	Crystallization / Distillation	Chromatography is not economically viable for multi-kilogram quantities. Developing a robust crystallization protocol is essential for achieving high purity at scale.

Section 2: Troubleshooting Guide

This section addresses common problems encountered during the synthesis in a direct Q&A format.

Q1: My reaction is stalled or shows very low conversion of 2-bromopyridine. What's wrong?

Answer: This is a classic symptom of catalyst deactivation or inhibition. The lone pair of electrons on the pyridine nitrogen can act as a poison by strongly coordinating to the palladium

© 2026 BenchChem. All rights reserved.

center, thereby inhibiting its catalytic activity.

- Immediate Checks:
  - Inert Atmosphere: Was the system rigorously degassed and maintained under positive nitrogen pressure? Oxygen can oxidize and deactivate both the Pd(0) active species and the phosphine ligands.
  - Reagent Quality: Are your reagents anhydrous? Water can interfere with the catalytic cycle. Is the phenylacetylene free of peroxides? Is the amine base pure?
- Causality & Solutions:
  - Catalyst Poisoning: The 2-substituted pyridine substrate is a known inhibitor. While unavoidable, its effect can be mitigated.
    - Increase Ligand Ratio: Adding a slight excess of the phosphine ligand (e.g., increasing PPh_3 to 4-6 mol%) can sometimes help stabilize the palladium center and prevent pyridine coordination.
    - Change Ligand: Electron-rich, bulky phosphine ligands (e.g., $P(t\text{-}Bu)_3$) can accelerate the rate-limiting oxidative addition step, making the overall catalytic cycle faster and potentially outcompeting the poisoning process.
  - Palladium Black Formation: If you see a black precipitate, your Pd(0) catalyst has likely crashed out of the solution. This can be caused by insufficient ligand, high temperatures, or impurities. Ensure adequate ligand is present and that the reaction temperature does not overshoot the target.

Q2: I'm getting a significant amount of a non-polar byproduct that complicates purification. What is it and how can I prevent it?

Answer: You are most likely observing the formation of 1,4-diphenylbuta-1,3-diyne, the product of Glaser homocoupling of phenylacetylene. This side reaction is catalyzed by the copper(I) species in the presence of oxygen.

© 2026 BenchChem. All rights reserved.

- Prevention Strategies:
  - Rigorous Inerting: This is the most critical factor. Ensure your solvent and reaction vessel are thoroughly deoxygenated before and during the reaction. A continuous, gentle nitrogen sweep is recommended.
  - Slow Addition of Phenylacetylene: As detailed in the protocol, adding the alkyne slowly via a syringe pump keeps its instantaneous concentration low, favoring the cross-coupling reaction over homocoupling.
  - Minimize Copper Catalyst: Use the lowest effective amount of CuI (e.g., 0.5-1.0 mol%). While this might slightly slow the reaction, it significantly reduces the rate of homocoupling.
  - Consider a Copper-Free Protocol: For applications where even trace copper contamination is unacceptable (e.g., OLED materials, some pharmaceuticals), a copper-free Sonogashira is the best approach. This typically requires a more active palladium catalyst system (e.g., using a bulky phosphine ligand) and may need slightly higher temperatures, but it completely eliminates the Glaser coupling pathway.

Caption: Troubleshooting workflow for minimizing phenylacetylene homocoupling.

Section 3: Scale-Up Considerations & FAQs

Q3: How do I manage the reaction exotherm during a 10 kg scale synthesis?

Answer: While the Sonogashira coupling is not violently exothermic, the heat generated can become significant at scale, leading to temperature control issues, increased byproduct formation, and potential solvent boiling.

- Key Principles for Thermal Management:
  - Reactor Choice: Use a jacketed reactor with good heat transfer capabilities. Ensure the heating/cooling fluid is appropriate for the target temperature range.

© 2026 BenchChem. All rights reserved.

- Controlled Addition: The primary method for controlling the exotherm is the slow, controlled addition of phenylacetylene. The rate of addition can be tied to the internal temperature, i.e., the addition is slowed or stopped if the temperature rises above a set limit.

- Process Modeling: For very large scales, consider performing reaction calorimetry (e.g., using an RC1 calorimeter) on a smaller scale to accurately model the heat flow and determine the maximum safe addition rate for your specific reactor configuration.

Q4: My product won't crystallize, or the crystallized product is oily and impure. How can I develop a robust purification process?

Answer: This is a common and critical scale-up hurdle. Moving away from chromatography requires a well-developed crystallization procedure.

- Crystallization Development Strategy:

  - Solvent Screening: The goal is to find a solvent system where the product is soluble at elevated temperatures but poorly soluble at room temperature or below, while impurities remain in the mother liquor. Start with non-polar solvents like heptane, hexane, or cyclohexane. If the product is too soluble, consider a binary solvent system, such as Toluene/Heptane or Ethanol/Water, where one is a good solvent and the other is an anti-solvent.

  - Control Cooling Rate: A slow, controlled cooling profile is essential for forming pure, well-defined crystals. Crash cooling will trap impurities.

  - Seeding: If crystallization is difficult to initiate, use a small amount of pure product as seed crystals once the solution is saturated.

  - Alternative Purification: If crystallization proves ineffective, consider vacuum distillation. **2-(2-Phenylethynyl)pyridine** has a relatively high boiling point, but this can be an effective method for removing non-volatile impurities at scale.

© 2026 BenchChem. All rights reserved.

Q5: What are the primary safety concerns when handling multi-kilogram quantities of the reagents?

Answer: Safety must be the top priority. The main hazards are associated with the reagents and solvents.

- Phenylacetylene: Flammable liquid with a low flash point. Vapors can form explosive mixtures with air. Ensure all equipment is properly grounded to prevent static discharge. Use non-sparking tools.
- Pyridine Derivatives: Pyridines are often toxic and can be absorbed through the skin. They have a strong, unpleasant odor. Ensure adequate ventilation and use appropriate PPE.
- Triethylamine: Flammable and corrosive.
- Solvents (Toluene): Flammable and toxic.
- Process Safety:
  - Containment: Use a closed system to minimize vapor release.
  - Emergency Preparedness: Ensure appropriate fire extinguishers (e.g., CO_2, dry chemical), spill kits, and safety showers are readily accessible.
  - Pressure Relief: Equip the reactor with a rupture disc or pressure relief valve, especially if there is any risk of a runaway reaction.

© 2026 BenchChem. All rights reserved.

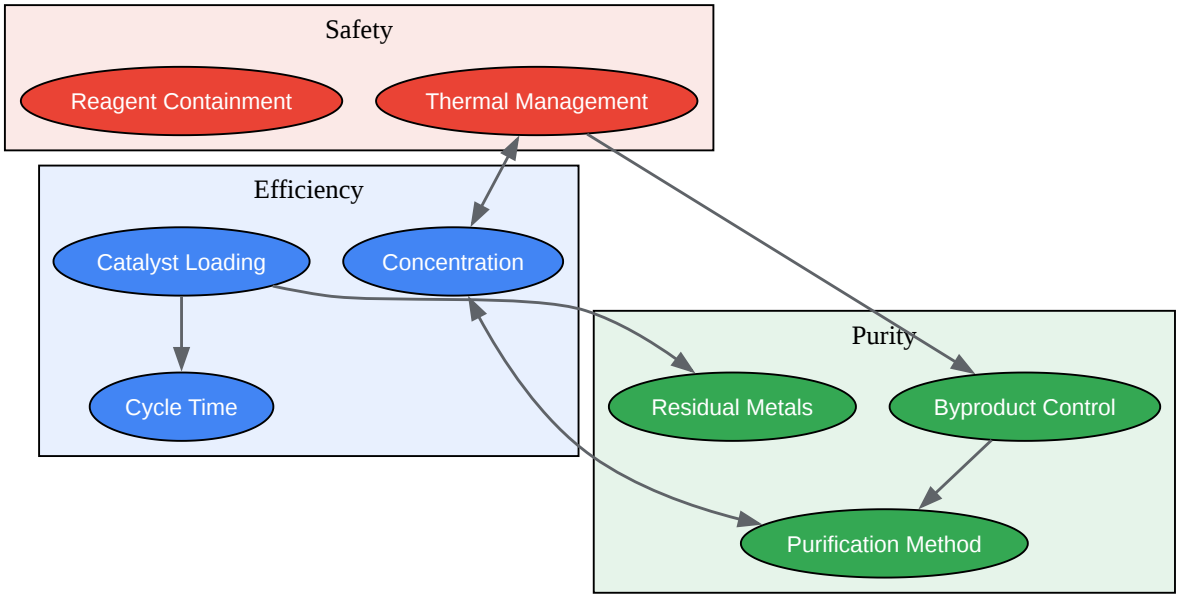

Click to download full resolution via product page

Caption: Interdependencies of key parameters in process scale-up.

References

- Wikipedia. (n.d.). Sonogashira coupling. Retrieved January 23, 2026, from [Link]
- Chemistry LibreTexts. (2024, August 5). Sonogashira Coupling. Retrieved January 23, 2026, from [Link]
- Chinchilla, R., & Nájera, C. (2007). The Sonogashira Reaction: A Booming Methodology in Synthetic Organic Chemistry. Chemical Reviews, 107(3), 874–922. [Link]
- KAUST Repository. (n.d.). Optimization of an Efficient and Sustainable Sonogashira Cross-Coupling Protocol. Retrieved January 23, 2026, from [Link]

© 2026 BenchChem. All rights reserved.

- Organic Chemistry Portal. (n.d.). Sonogashira Coupling. Retrieved January 23, 2026, from [Link]
- Al-Amin, M., & Bidita, N. (2021). Copper-free Sonogashira cross-coupling reactions: an overview. RSC Advances, 11(12), 6969–6993. [Link]
- Anumula, R. R., & Vankar, Y. D. (2023). Copper-catalyzed Sonogashira reactions: advances and perspectives since 2014. RSC Advances, 13(8), 5195–5221. [Link]
- ResearchGate. (n.d.). Large-Scale Sonogashira Coupling for the Synthesis of an mGluR5 Negative Allosteric Modulator. Retrieved January 23, 2026, from [Link]
- Gasparini, F., et al. (2002). 2-Methyl-6-(phenylethynyl)-pyridine (MPEP), a potent, selective and systemically active mGlu5 receptor antagonist. Neuropharmacology, 42(5), 587-594. [Link]
- ResearchGate. (n.d.). Insights into Sonogashira Cross-Coupling by High-Throughput Kinetics and Descriptor Modeling. Retrieved January 23, 2026, from [Link]
- YouTube. (2016, August 10). Sonogashira Coupling Reaction Mechanism. Retrieved January 23, 2026, from [Link]
- Carl Roth GmbH + Co. KG. (n.d.). Safety Data Sheet: Pyridine. Retrieved January 23, 2026, from [Link]
- ACS Engineering Au. (2024, November 27). Model-Based Scale-Up of a Homogeneously Catalyzed Sonogashira Coupling Reaction in a 3D Printed Continuous-Flow Reactor. Retrieved January 23, 2026, from [Link]
- ResearchGate. (n.d.). A Guide to Sonogashira Cross-Coupling Reactions: The Influence of Substituents in Aryl Bromides, Acetylenes, and Phosphines. Retrieved January 23, 2026, from [Link]
- National Institutes of Health. (n.d.). Bypassing the Limitations of Directed C–H Functionalizations of Heterocycles. Retrieved January 23, 2026, from [Link]

© 2026 BenchChem. All rights reserved.

- ACS Publications. (2020, May 7). Designing Homogeneous Copper-Free Sonogashira Reaction through a Prism of Pd–Pd Transmetalation. Retrieved January 23, 2026, from [Link]
- ResearchGate. (n.d.). A Convenient Procedure for Sonogashira Reactions Using Propyne. Retrieved January 23, 2026, from [Link]
- ACS Green Chemistry Institute. (n.d.). Safety Issues with Pyridine Ring Construction. Retrieved January 23, 2026, from [Link]
- ResearchGate. (2021, February 3). (PDF) Copper-free Sonogashira cross-coupling reactions: an overview. Retrieved January 23, 2026, from [Link]
- Wikipedia. (n.d.). 2-Methyl-6-(phenylethynyl)pyridine. Retrieved January 23, 2026, from [Link]
- To cite this document: BenchChem. [Technical Support Center: Scale-Up Synthesis of 2-(2-Phenylethynyl)pyridine]. BenchChem, [2026]. [Online PDF]. Available at: [https://www.benchchem.com/product/b076701/docs#technical-support-center-scale-up-synthesis-of-2-2-phenylethynyl-pyridine]

Disclaimer & Data Validity:

The information provided in this document is for Research Use Only (RUO) and is strictly not intended for diagnostic or therapeutic procedures. While BenchChem strives to provide accurate protocols, we make no warranties, express or implied, regarding the fitness of this product for every specific experimental setup.

Technical Support: The protocols provided are for reference purposes. Unsure if this reagent suits your experiment?

Need Industrial/Bulk Grade? Request Custom Synthesis Quote

© 2026 BenchChem. All rights reserved.

BenchChem

Our mission is to be the trusted global source of essential and advanced chemicals, empowering scientists and researchers to drive progress in science and industry.

Contact

Address: 3281 E Guasti Rd

Ontario, CA 91761, United States

Phone: (601) 213-4426

Email: info@benchchem.com

Contact our Ph.D. Support Team for a compatibility check

© 2026 BenchChem. All rights reserved.