Application Notes and Protocols for Studying Neutrophil Aggregation Using Sodium Arachidate

Author: BenchChem Technical Support Team. **Date**: December 2025

Compound of Interest		
Compound Name:	*Sodium arachidate*	
Cat. No.:	*B076927*	Get Quote

For Researchers, Scientists, and Drug Development Professionals

Introduction

Neutrophil aggregation is a critical process in the inflammatory response, contributing to the localization of immune cells at sites of injury or infection. Dysregulation of this process can lead to chronic inflammation and tissue damage. **Sodium arachidate**, the sodium salt of arachidonic acid, serves as a valuable tool for in vitro studies of neutrophil aggregation. Arachidonic acid is a key precursor to a variety of bioactive eicosanoids, including prostaglandins and leukotrienes, which are potent mediators of inflammation and neutrophil activation.[1][2][3] By stimulating neutrophils with **sodium arachidate**, researchers can investigate the signaling pathways that govern aggregation and screen for potential therapeutic agents that modulate this response.

Exogenous arachidonic acid at micromolar concentrations has been shown to stimulate human neutrophils to aggregate.[1][4] This effect is not a general property of all fatty acids, indicating a specific metabolic pathway is involved.[1] The aggregation response can be potentiated by cytochalasin B, a fungal metabolite that disrupts the actin cytoskeleton and enhances various neutrophil responses.[1][4] Importantly, the aggregation induced by arachidonic acid is dependent on its metabolism, as inhibitors of cyclooxygenase (COX) and lipoxygenase (LOX) pathways, such as indomethacin and 5,8,11,14-eicosatetraynoic acid (ETYA), can block this

© 2025 BenchChem. All rights reserved.

process.[2][5] This suggests that it is the metabolic derivatives of arachidonic acid, rather than the fatty acid itself, that directly mediate the aggregation of neutrophils.[1][2]

Principle of the Assay

The use of **sodium arachidate** to induce neutrophil aggregation is based on the enzymatic conversion of arachidonic acid into pro-aggregatory eicosanoids by the neutrophils themselves. Upon stimulation, phospholipase A2 releases arachidonic acid from the cell membrane.[6] Exogenously supplied **sodium arachidate** bypasses this initial step, providing a direct substrate for the COX and LOX enzymes.[6] The resulting products, such as certain hydroxyeicosatetraenoic acids (HETEs), act as signaling molecules that trigger intracellular cascades leading to neutrophil activation, increased cell-surface adhesion molecule expression, and ultimately, cell-to-cell aggregation.[7][8] The extent of aggregation can be quantified by methods such as aggregometry, which measures changes in light transmission through a suspension of neutrophils, or by flow cytometry to detect cell clusters.[9][10]

Data Presentation

The following table summarizes quantitative data on the effects of arachidonic acid and its metabolites on neutrophil aggregation, as reported in the literature.

Compound	Effective Concentration / EC50	Inhibitors	Notes
Arachidonic Acid	Micromolar concentrations	5,8,11,14-eicosatetraynoic acid (ETYA), Indomethacin	Aggregation is potentiated by Cytochalasin B.[1][2]
5-hydroxyeicosatetraenoic acid (5-HETE)	Half-maximal response at 200 nM	Nordihydroguaiaretic acid, ETYA, Indomethacin	Requires extracellular calcium and magnesium.[8]
12-hydroxyeicosatetraenoic acid (12-HETE)	Half-maximal response at 40 nM	Nordihydroguaiaretic acid, ETYA, Indomethacin	A potent aggregating agent for neutrophils.[8]

© 2025 BenchChem. All rights reserved.

Experimental Protocols

Protocol 1: Isolation of Human Neutrophils from Whole Blood

This protocol describes a standard method for isolating human neutrophils using density gradient centrifugation.[11]

Materials:

- Anticoagulated (e.g., with EDTA, heparin, or citrate) whole human blood
- Density gradient medium for neutrophil isolation (e.g., a mixture of sodium metrizoate and Dextran 500)
- Hanks' Balanced Salt Solution (HBSS), without Ca2+/Mg2+
- Red Blood Cell (RBC) Lysis Buffer
- Phosphate Buffered Saline (PBS)
- Centrifuge tubes
- Serological pipettes
- Centrifuge

Procedure:

- Bring all reagents to room temperature.
- Carefully layer 5.0 mL of anticoagulated whole blood over 5.0 mL of the neutrophil isolation medium in a centrifuge tube. Avoid mixing the layers.
- Centrifuge at 500 x g for 35 minutes at 20-25°C with the brake off.
- After centrifugation, distinct layers will be visible. Carefully aspirate and discard the upper layers (plasma and mononuclear cells), leaving the neutrophil layer intact.

© 2025 BenchChem. All rights reserved.

- Transfer the neutrophil layer to a new centrifuge tube.
- Add 10 mL of HBSS (without Ca2+/Mg2+) and centrifuge at 350 x g for 10 minutes.
- Discard the supernatant. Resuspend the cell pellet, which contains neutrophils and contaminating RBCs.
- Add RBC Lysis Buffer according to the manufacturer's instructions and incubate for the recommended time to lyse the remaining red blood cells.
- Stop the lysis by adding an excess of HBSS or PBS and centrifuge at 250 x g for 5 minutes.
- Discard the supernatant and wash the neutrophil pellet with HBSS or PBS.
- Resuspend the final neutrophil pellet in the desired assay buffer.
- Determine cell concentration and viability (e.g., using a hemocytometer and trypan blue exclusion). The purity should be >95%. Use the isolated neutrophils within 2-4 hours for optimal function.[11]

Protocol 2: Neutrophil Aggregation Assay using **Sodium Arachidate**

This protocol outlines the procedure for inducing and measuring neutrophil aggregation.

Materials:

- Isolated human neutrophils
- Assay buffer (e.g., HBSS with Ca2+ and Mg2+)
- **Sodium Arachidate** stock solution (dissolved in an appropriate solvent like DMSO, then diluted in assay buffer)
- Cytochalasin B (optional, for potentiation)
- Inhibitors (e.g., ETYA, indomethacin) for mechanistic studies

© 2025 BenchChem. All rights reserved.

- Aggregometer or a plate reader capable of measuring light transmission/absorbance
- 96-well plates or aggregometer cuvettes

Procedure:

- Resuspend the isolated neutrophils in the assay buffer to a final concentration of 2 x 10^7 cells/mL.[12]
- For inhibitor studies: Pre-incubate the neutrophil suspension with the desired inhibitor (e.g., ETYA or indomethacin) for a specified time (e.g., 10-15 minutes) at 37°C.
- For potentiation studies: Pre-incubate the neutrophil suspension with Cytochalasin B (e.g., 1 µM) for 15 minutes.[12]
- Pipette the neutrophil suspension into the wells of a 96-well plate or an aggregometer cuvette.
- Place the plate or cuvette in the instrument and allow the baseline reading (light transmission or absorbance) to stabilize.
- Add the **sodium arachidate** solution to the neutrophil suspension to achieve the desired final concentration (e.g., in the micromolar range).
- Immediately start recording the change in light transmission or absorbance over time. Aggregation is indicated by an increase in light transmission.
- Continue recording for a sufficient duration (e.g., 10-20 minutes) to observe the full aggregation response.

Data Analysis: The aggregation response can be quantified by measuring the maximum change in light transmission or the area under the aggregation curve. Compare the responses in the presence and absence of inhibitors or potentiators to assess their effects.

Visualizations

© 2025 BenchChem. All rights reserved.

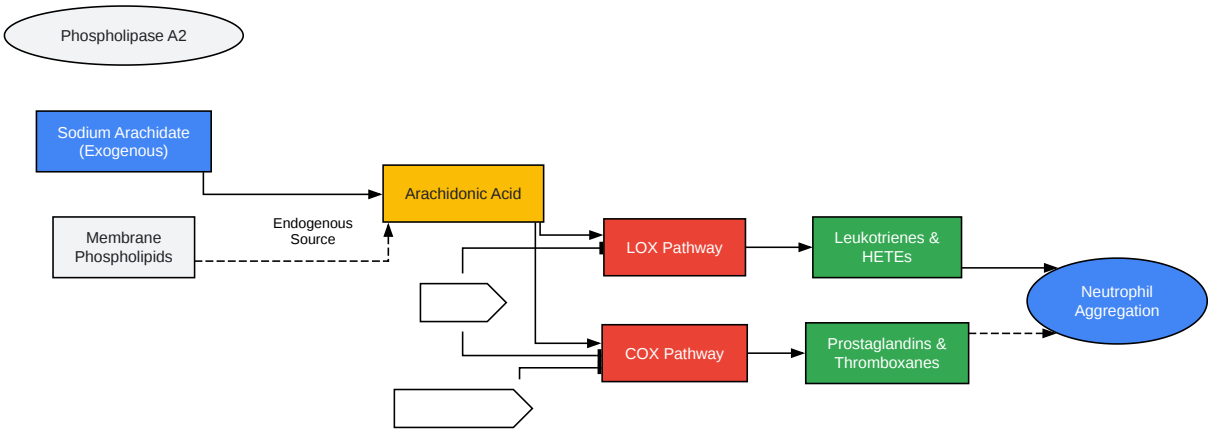

Click to download full resolution via product page

Caption: Signaling pathway of **sodium arachidate**-induced neutrophil aggregation.

© 2025 BenchChem. All rights reserved.

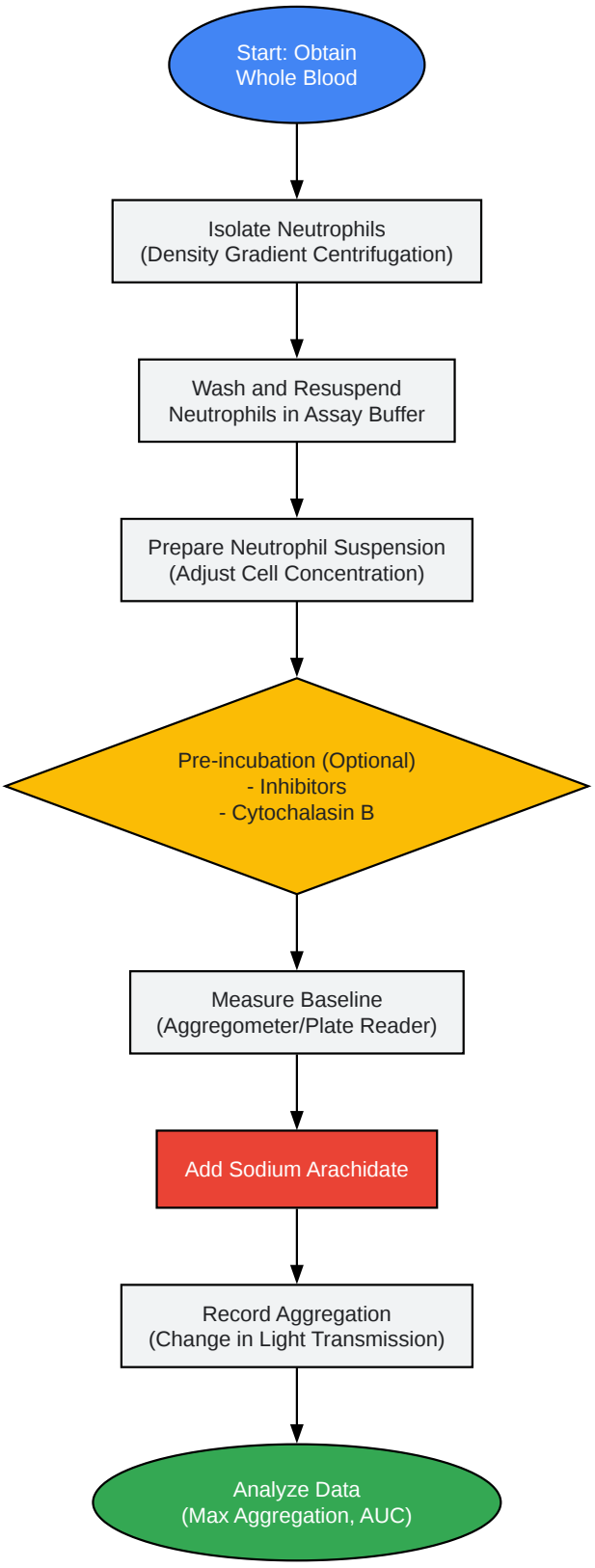

Click to download full resolution via product page

Caption: Experimental workflow for a neutrophil aggregation assay.

© 2025 BenchChem. All rights reserved.

Need Custom Synthesis?

BenchChem offers custom synthesis for rare earth carbides and specific isotopiclabeling.

Email: info@benchchem.com or Request Quote Online.

References

- 1. Neutrophil aggregation and degranulation. Effect of arachidonic acid - PubMed [pubmed.ncbi.nlm.nih.gov]
- 2. A possible role of arachidonic acid in human neutrophil aggregation and degranulation - PMC [pmc.ncbi.nlm.nih.gov]
- 3. Arachidonic acid-derived signaling lipids and functions in impaired healing - PMC [pmc.ncbi.nlm.nih.gov]
- 4. Neutrophil aggregation and degranulation. Effect of arachidonic acid - PMC [pmc.ncbi.nlm.nih.gov]
- 5. researchgate.net [researchgate.net]
- 6. m.youtube.com [m.youtube.com]
- 7. Neutrophil-aggregating activity of monohydroxyeicosatetraenoic acids - PMC [pmc.ncbi.nlm.nih.gov]
- 8. Neutrophil-aggregating activity of monohydroxyeicosatetraenoic acids - PubMed [pubmed.ncbi.nlm.nih.gov]
- 9. P-SELECTIN MEDIATED PLATELET-NEUTROPHIL AGGREGATE FORMATION ACTIVATES NEUTROPHILS IN MOUSE AND HUMAN SICKLE CELL DISEASE - PMC [pmc.ncbi.nlm.nih.gov]
- 10. Experimental conditions shape in vitro formation of murine platelet-leukocyte aggregates - PMC [pmc.ncbi.nlm.nih.gov]
- 11. Neutrophil Isolation Protocol - PMC [pmc.ncbi.nlm.nih.gov]
- 12. 2-Arachidonoyl-glycerol- and arachidonic acid-stimulated neutrophils release antimicrobial effectors against E. coli, S. aureus, HSV-1, and RSV - PMC [pmc.ncbi.nlm.nih.gov]

- To cite this document: BenchChem. [Application Notes and Protocols for Studying Neutrophil Aggregation Using Sodium Arachidate]. BenchChem, [2025]. [Online PDF]. Available at: [https://www.benchchem.com/product/b076927#using-sodium-arachidate-to-study-neutrophil-aggregation]

© 2025 BenchChem. All rights reserved.

Disclaimer & Data Validity:

The information provided in this document is for Research Use Only (RUO) and is strictly not intended for diagnostic or therapeutic procedures. While BenchChem strives to provide accurate protocols, we make no warranties, express or implied, regarding the fitness of this product for every specific experimental setup.

Technical Support: The protocols provided are for reference purposes. Unsure if this reagent suits your experiment? [Contact our Ph.D. Support Team for a compatibility check]

Need Industrial/Bulk Grade? Request Custom Synthesis Quote

BenchChem

Our mission is to be the trusted global source of essential and advanced chemicals, empowering scientists and researchers to drive progress in science and industry.

Contact

Address: 3281 E Guasti Rd

Ontario, CA 91761, United States

Phone: (601) 213-4426

Email: info@benchchem.com

© 2025 BenchChem. All rights reserved.