Technical Whitepaper: 2-Trimethylsilylfuran – A Versatile Building Block

Author: BenchChem Technical Support Team. **Date**: May 2026

Compound of Interest

Compound Name:	*2-Trimethylsilylfuran*
CAS No.:	*1578-33-2*
Cat. No.:	*B074580*

Get Quote

Executive Summary

2-Trimethylsilylfuran (TMS-Furan) represents a pivotal intermediate in organometallic chemistry and heterocyclic synthesis. Unlike its unsubstituted parent, TMS-Furan possesses a unique electronic and steric profile governed by the "Silicon Effect." This moiety serves a dual function: it acts as a robust blocking group to direct regioselectivity during electrophilic substitution, and it functions as a "masked" proton or halogen equivalent, accessible via ipso-substitution.[1] This guide provides a comprehensive technical analysis of **2-trimethylsilylfuran**, detailing its physicochemical properties, synthesis, mechanistic reactivity, and applications in modern drug discovery.

Fundamental Physicochemical Profile[2][3]

The introduction of the trimethylsilyl (TMS) group at the C2 position of the furan ring significantly alters the lipophilicity and volatility of the molecule compared to furan.

Table 1: Key Physicochemical Properties

© 2026 BenchChem. All rights reserved.

Property	Value	Notes
IUPAC Name	2-(Trimethylsilyl)furan	
CAS Number	1578-33-2	
Molecular Formula	$C_7H_{12}OSi$	
Molecular Weight	140.26 g/mol	
Boiling Point	124–125 °C	At 760 mmHg (Standard Pressure)
Density	0.880 g/mL	At 25 °C
Refractive Index ( )	1.4460	
Flash Point	23 °C	Flammable liquid
Solubility	Soluble in Et_2O, THF, DCM, Hexanes	Hydrolytically stable in neutral media

Synthesis & Production

The synthesis of **2-trimethylsilylfuran** is a canonical example of heteroatom-directed lithiation. The high acidity of the C2-proton in furan (

) allows for selective deprotonation by organolithium reagents, followed by electrophilic trapping with chlorotrimethylsilane (TMSCl).

Mechanistic Pathway[1][2][5]

- Coordination: The lithium cation coordinates to the furan oxygen, increasing the acidity of the

  -protons (C2/C5).
- Deprotonation:n-Butyllithium removes the C2 proton to form 2-lithiofuran.
- Silylation: The nucleophilic 2-lithiofuran attacks the silicon center of TMSCl, displacing chloride.

© 2026 BenchChem. All rights reserved.

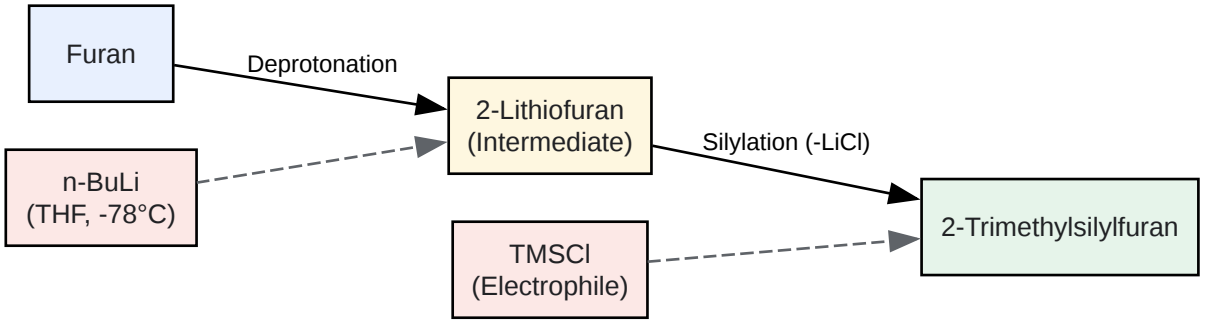

Click to download full resolution via product page

Figure 1: Synthetic pathway for **2-trimethylsilylfuran** via lithiation.

Reactivity & Mechanistic Insights[6][7]

The utility of **2-trimethylsilylfuran** stems from the ability of the silicon atom to stabilize positive charge in the

-position (the

-silicon effect) and its susceptibility to nucleophilic attack (desilylation).

Regioselectivity: The Blocking Effect

In unsubstituted furan, electrophilic aromatic substitution (EAS) occurs preferentially at C2 and C5. By occupying C2 with a TMS group, the molecule forces incoming electrophiles to the C5 position, provided the electrophile does not trigger ipso-substitution.

Ipso-Substitution (Desilylation)

The C-Si bond is weaker than a C-H bond toward certain electrophiles. When treated with strong electrophiles (e.g., halogens, acyl chlorides) or under specific acidic conditions, the TMS group acts as a leaving group. This is known as ipso-substitution.[2][3]

- Mechanism: The electrophile attacks C2, forming a carbocation stabilized by the adjacent oxygen. The silicon moiety is then eliminated (usually as TMS-X), restoring aromaticity.
- Utility: This allows the TMS group to temporarily protect the C2 position, direct chemistry to C5, and then be replaced by a functional group later.

© 2026 BenchChem. All rights reserved.

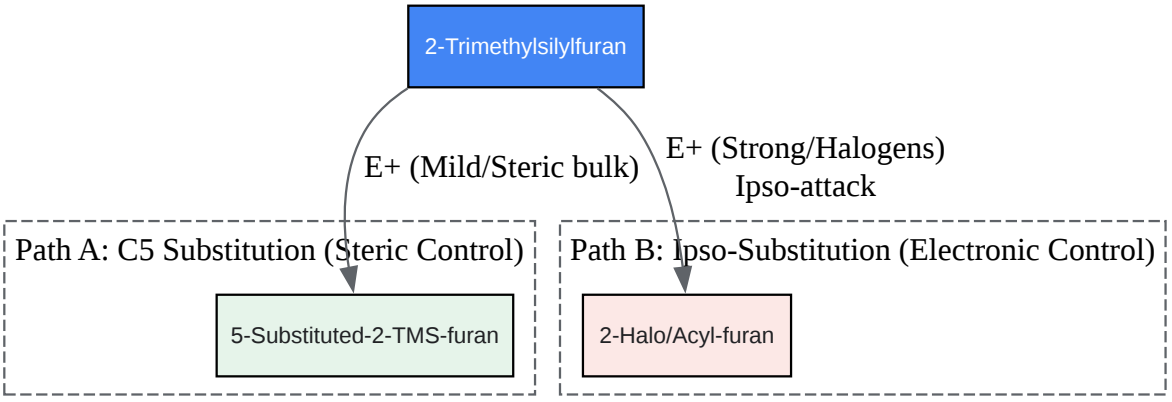

Click to download full resolution via product page

Figure 2: Divergent reactivity pathways: C5-substitution vs. Ipso-substitution.

Diels-Alder Cycloaddition

Furan derivatives are classic dienes for Diels-Alder reactions. However, they often suffer from reversibility (retro-Diels-Alder). The TMS group adds steric bulk, which can influence the endo/exo selectivity, and electronic stabilization to the transition state. It is particularly useful in reacting with benzyne or maleic anhydride to form oxabicyclic intermediates.

Applications in Drug Discovery & Synthesis[10]

Furan as a Pharmacophore Surrogate

Furans are often metabolic liabilities (due to oxidation to reactive enedials). However, **2-trimethylsilylfuran** serves as a precursor to more stable, functionalized furans found in natural products (e.g., terpenes) or as a bioisostere in early-stage hit-to-lead optimization.

The "Disposable" Directing Group

In the synthesis of complex polysubstituted furans, the TMS group is used to block the most reactive site (C2), allowing functionalization at C3 or C4 (via further lithiation strategies), followed by removal of the TMS group (protodesilylation) or replacement with a halogen (halodesilylation) for cross-coupling reactions.

© 2026 BenchChem. All rights reserved.

Experimental Protocols

Protocol A: Synthesis of 2-Trimethylsilylfuran

Standard Operating Procedure for Lab-Scale Synthesis

Reagents:

- Furan (freshly distilled)
- n-Butyllithium (1.6 M in hexanes)
- Chlorotrimethylsilane (TMSCl)
- Tetrahydrofuran (THF, anhydrous)

Step-by-Step:

- Setup: Flame-dry a 500 mL two-neck round-bottom flask equipped with a magnetic stir bar, nitrogen inlet, and rubber septum. Flush with

  .
- Solvent: Add anhydrous THF (100 mL) and furan (3.40 g, 50 mmol). Cool the solution to -78 °C (dry ice/acetone bath).
- Lithiation: Add n-BuLi (34 mL, 55 mmol) dropwise via syringe over 20 minutes.
  - Note: Maintain temperature below -70 °C to prevent ring fragmentation.
- Incubation: Stir the mixture at 0 °C for 30 minutes to ensure complete lithiation (solution turns yellow/orange).
- Silylation: Cool back to -78 °C. Add TMSCl (6.5 g, 60 mmol) dropwise.
- Workup: Allow the mixture to warm to room temperature and stir for 2 hours. Quench with saturated

  (aq).

© 2026 BenchChem. All rights reserved.

- Extraction: Extract with diethyl ether (

  mL). Wash combined organics with brine, dry over

  , and concentrate.

- Purification: Distill the residue at atmospheric pressure (bp 124–125 °C) to yield the product as a colorless liquid.

Protocol B: Ipso-Iodination (Synthesis of 2-Iodofuran)

Demonstrating the TMS group as a leaving group.

Reagents:

- **2-Trimethylsilylfuran**[4][5]
- Iodine (

)[6]

- Dichloromethane (DCM)

Step-by-Step:

- Dissolve **2-trimethylsilylfuran** (1.0 equiv) in DCM at 0 °C.
- Add Iodine (1.1 equiv) in portions. The reaction is usually immediate, indicated by the fading of the iodine color (initially) or persistence (at end).
- Wash with aqueous sodium thiosulfate (

) to remove excess iodine.

- The TMS group is converted to TMS-I (volatile/reactive) or hydrolyzed, leaving 2-iodofuran.

Safety & Handling

- Flammability: **2-Trimethylsilylfuran** is a flammable liquid (Flash point 23 °C). Store in a cool, well-ventilated area away from ignition sources.

© 2026 BenchChem. All rights reserved.

- Reactivity: Avoid strong oxidizing agents and strong acids (which cause protodesilylation).
- Health: Standard PPE (gloves, goggles, lab coat) is required. Use in a fume hood to avoid inhalation of vapors.

References

- Properties & Data: ChemicalBook. **2-Trimethylsilylfuran** CAS#: 1578-33-2. Available at:
- Synthesis Protocol: Organic Syntheses. Preparation of 2-Substituted Furans via Lithiation. (Adapted from general organolithium protocols for furan derivatives). See: Org. Synth.2010, 87, 201. Available at:
- Electrophilic Substitution Mechanism: Master Organic Chemistry. Electrophilic Aromatic Substitution: The Six Key Reactions. Available at:
- Ipso-Substitution: Taylor, R. Electrophilic Aromatic Substitution. Wiley, 1990.
- Diels-Alder Reactivity: Wikipedia. Diels–Alder reaction.[7][8] Available at:

Need Custom Synthesis?

BenchChem offers custom synthesis for rare earth carbides and specific isotopiclabeling.

Email: info@benchchem.com or Request Quote Online.

Sources

- 1. chemistry.stackexchange.com [chemistry.stackexchange.com]
- 2. ipso-Substitution of a sulphinyl or sulphonyl group attached to pyridine rings and its application for the synthesis of macrocycles - Journal of the Chemical Society, Perkin Transactions 1 (RSC Publishing) [pubs.rsc.org]
- 3. youtube.com [youtube.com]
- 4. 2-TRIMETHYLSILYLFURAN CAS#: 1578-33-2 [m.chemicalbook.com]
- 5. tandfonline.com [tandfonline.com]
- 6. Organic Syntheses Procedure [orgsyn.org]

© 2026 BenchChem. All rights reserved.

- 7. masterorganicchemistry.com [masterorganicchemistry.com]
- 8. Diels–Alder reaction - Wikipedia [en.wikipedia.org]
- To cite this document: BenchChem. [Technical Whitepaper: 2-Trimethylsilylfuran – A Versatile Building Block]. BenchChem, [2026]. [Online PDF]. Available at: [https://www.benchchem.com/product/b074580/docs#technical-whitepaper-2-trimethylsilylfuran-a-versatile-building-block]

Disclaimer & Data Validity:

The information provided in this document is for Research Use Only (RUO) and is strictly not intended for diagnostic or therapeutic procedures. While BenchChem strives to provide accurate protocols, we make no warranties, express or implied, regarding the fitness of this product for every specific experimental setup.

Technical Support: The protocols provided are for reference purposes. Unsure if this reagent suits your experiment?

Need Industrial/Bulk Grade? Request Custom Synthesis Quote

BenchChem

Our mission is to be the trusted global source of essential and advanced chemicals, empowering scientists and researchers to drive progress in science and industry.

Contact

Address: 3281 E Guasti Rd

Ontario, CA 91761, United States

Phone: (601) 213-4426

Email: info@benchchem.com

Contact our Ph.D. Support Team for a compatibility check

© 2026 BenchChem. All rights reserved.