Spectroscopic data of 3-ethyl-2-methylphenol (NMR, IR, MS)

Author: BenchChem Technical Support Team. **Date**: May 2026

Compound of Interest

Compound Name:	*3-ethyl-2-methylphenol*
CAS No.:	*1123-73-5*
Cat. No.:	*B073890*

Get Quote

Comprehensive Spectroscopic Guide: 3-Ethyl-2-methylphenol

CAS Registry Number: 1123-73-5 Molecular Formula: $C_9H_{12}O$ Molecular Weight: 136.19 g/mol IUPAC Name: **3-Ethyl-2-methylphenol**[1]

Structural Analysis & Logic

Before interpreting spectra, the structural environment must be defined to predict signal behavior. The molecule consists of a phenol core with a 1,2,3-trisubstitution pattern:

- C1: Hydroxyl group (-OH) (Electron-donating, deshielding).
- C2: Methyl group ($-CH_3$) (Weakly activating, steric bulk).
- C3: Ethyl group ($-CH_2CH_3$) (Weakly activating).
- C4, C5, C6: Aromatic protons.

© 2026 BenchChem. All rights reserved.

This "crowded" arrangement at the 1, 2, and 3 positions creates a specific steric environment that influences the chemical shift of the hydroxyl proton and the coupling constants of the remaining aromatic protons.

Structural Connectivity Diagram (Graphviz)

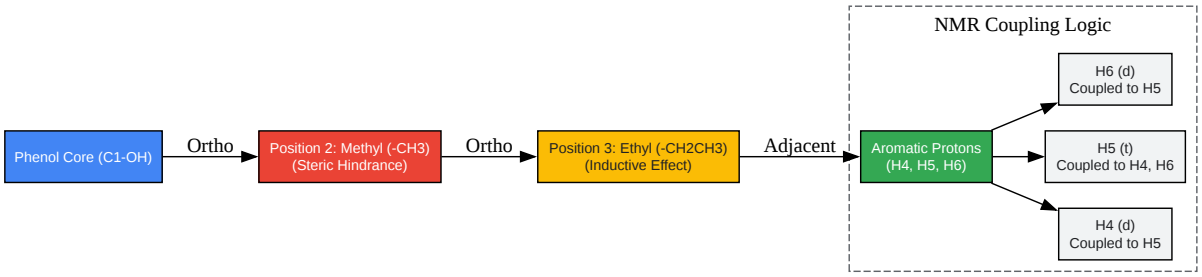

Click to download full resolution via product page

Caption: Structural connectivity and NMR coupling logic for **3-ethyl-2-methylphenol**.

Mass Spectrometry (GC-MS)

Method: Electron Ionization (EI), 70 eV.

The fragmentation of **3-ethyl-2-methylphenol** follows the characteristic pathways of alkylphenols. The stability of the aromatic ring dominates the spectrum, with side-chain cleavage providing the primary fragment ions.

Fragmentation Logic[2]

- Molecular Ion (M^+): The aromatic ring stabilizes the radical cation, resulting in a distinct molecular ion peak at m/z 136.
- Benzylic Cleavage (β-cleavage): The ethyl group at C3 is prone to losing a methyl radical ($\bullet CH_3$). This forms a stable quinoid-like or hydroxytropylium ion at m/z 121. This is typically

© 2026 BenchChem. All rights reserved.

the Base Peak (100%).

- Secondary Fragmentation: The ion at m/z 121 can lose CO (28 Da) or H_2O (18 Da) depending on internal energy, leading to ions at m/z 91 (tropylium) or m/z 77 (phenyl).

Key MS Peaks Table

m/z	Intensity	Assignment	Mechanism
136	Strong (~40-60%)	$[M]^+$	Molecular Ion (Stable aromatic system)
121	Base Peak (100%)	$[M - CH_3]^+$	Loss of methyl from ethyl group (Benzylic cleavage)
107	Moderate	$[M - C_2H_5]^+$	Loss of ethyl group (less favored than methyl loss)
91	Weak/Moderate	$[C_7H_7]^+$	Tropylium ion (Rearrangement)
77	Weak	$[C_6H_5]^+$	Phenyl cation (Ring degradation)

Fragmentation Pathway Diagram

© 2026 BenchChem. All rights reserved.

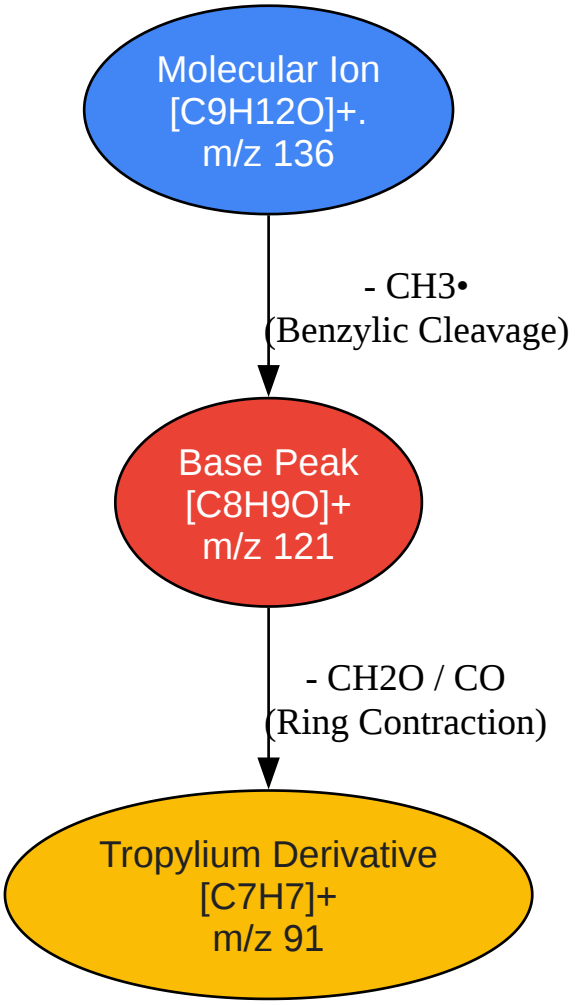

Click to download full resolution via product page

Caption: Primary mass spectrometry fragmentation pathway for **3-ethyl-2-methylphenol**.

Infrared Spectroscopy (IR)

Method: FTIR (Neat or KBr disk).

The IR spectrum is defined by the phenol functionality and the alkyl substitution pattern.

© 2026 BenchChem. All rights reserved.

Frequency (cm^{-1})	Vibration Mode	Description
3200–3450	O-H Stretch	Broad band due to intermolecular hydrogen bonding.
2960, 2930, 2870	C-H Stretch (Alkyl)	Asymmetric and symmetric stretching of methyl/ethyl groups.
1590, 1470	C=C Stretch (Aromatic)	Characteristic "breathing" modes of the benzene ring.
1220–1260	C-O Stretch	Strong band, characteristic of phenols.
800–850	C-H Bending (OOP)	Out-of-plane bending indicative of 1,2,3-trisubstitution (2 adjacent H's).

Nuclear Magnetic Resonance (NMR)

Solvent: $CDCl_3$ (Deuterated Chloroform) Reference: TMS (0.00 ppm)

^{1}H NMR Data (400 MHz)

The proton spectrum is the most definitive tool for distinguishing this isomer. The key is the coupling pattern of the three aromatic protons (H4, H5, H6).

© 2026 BenchChem. All rights reserved.

Shift (δ ppm)	Multiplicity	Integration	Assignment	Notes
6.95 – 7.10	Triplet (t)	1H	H5	Coupled to H4 and H6 (J ≈ 7.5 Hz).
6.75 – 6.85	Doublet (d)	1H	H4	Ortho to ethyl group.
6.60 – 6.70	Doublet (d)	1H	H6	Ortho to hydroxyl; typically most shielded aromatic proton.
4.60 – 5.00	Broad Singlet (s)	1H	-OH	Chemical shift varies with concentration/temperature.
2.62	Quartet (q)	2H	$-CH_2-$ (Ethyl)	J ≈ 7.6 Hz. Coupled to ethyl-CH_3.
2.21	Singlet (s)	3H	$-CH_3$ (Ring)	Attached at C2. Distinct singlet.
1.18	Triplet (t)	3H	$-CH_3$ (Ethyl)	J ≈ 7.6 Hz. Coupled to ethyl-CH_2.[1]

Expert Insight: The aromatic region appears as a "d-t-d" pattern (doublet-triplet-doublet). If the resolution is low, H4 and H5 may overlap, but H6 (ortho to OH) is usually distinct and upfield.

^{13}C NMR Data (100 MHz)

The carbon spectrum confirms the asymmetry of the molecule.

© 2026 BenchChem. All rights reserved.

Shift (δ ppm)	Carbon Type	Assignment
153.5	Quaternary (C-O)	C1 (Deshielded by Oxygen)
143.2	Quaternary	C3 (Attached to Ethyl)
128.5	Methine (CH)	C5
126.8	Methine (CH)	C4
122.0	Quaternary	C2 (Attached to Methyl)
113.5	Methine (CH)	C6 (Ortho to OH, shielded)
26.5	Methylene (CH_2)	Ethyl -CH_2-
14.2	Methyl (CH_3)	Ethyl -CH_3
11.5	Methyl (CH_3)	Ring -CH_3 (C2)

Experimental Protocol: Sample Preparation

To ensure high-fidelity spectral data, follow this preparation workflow:

- NMR Preparation:
  - Dissolve ~10 mg of **3-ethyl-2-methylphenol** in 0.6 mL of $CDCl_3$.
  - Critical Step: Ensure the sample is dry. Water peaks (from moisture) can overlap with the ethyl quartet around 1.5-2.0 ppm or broaden the OH signal. Use $CDCl_3$ stored over molecular sieves.
- GC-MS Preparation:
  - Dilute the sample to 100 ppm in Dichloromethane (DCM) or Methanol.
  - Inlet Temp: 250°C.
  - Column: DB-5ms or equivalent (non-polar).
  - Oven Program: 50°C (1 min) → 10°C/min → 280°C.

© 2026 BenchChem. All rights reserved.

- Note: Phenols can tail on polar columns; derivatization with BSTFA (forming the TMS ether) is recommended for sharp peak shapes and precise quantification.

References

- National Institute of Standards and Technology (NIST).3-Ethylphenol (Isomer Reference Data). NIST Chemistry WebBook, SRD 69. Available at: [Link]
- PubChem.**3-Ethyl-2-methylphenol** (Compound Summary). National Library of Medicine. Available at: [Link]
- SpectraBase.**3-Ethyl-2-methylphenol** Spectral Data. John Wiley & Sons.[1] Available at: [Link][1]
- SDBS.Spectral Database for Organic Compounds.[2] National Institute of Advanced Industrial Science and Technology (AIST). (General Alkylphenol Trends). Available at: [Link]

Need Custom Synthesis?

BenchChem offers custom synthesis for rare earth carbides and specific isotopiclabeling.

Email: info@benchchem.com or Request Quote Online.

Sources

- 1. 3-Ethyl-o-cresol | C9H12O | CID 34858 - PubChem [pubchem.ncbi.nlm.nih.gov]
- 2. quora.com [quora.com]

- To cite this document: BenchChem. [Spectroscopic data of 3-ethyl-2-methylphenol (NMR, IR, MS)]. BenchChem, [2026]. [Online PDF]. Available at: [https://www.benchchem.com/product/b073890/docs#spectroscopic-data-of-3-ethyl-2-methylphenol-nmr-ir-ms]

Disclaimer & Data Validity:

The information provided in this document is for Research Use Only (RUO) and is strictly not intended for diagnostic or therapeutic procedures. While BenchChem strives to provide

accurate protocols, we make no warranties, express or implied, regarding the fitness of this product for every specific experimental setup.

Technical Support: The protocols provided are for reference purposes. Unsure if this reagent suits your experiment?

Need Industrial/Bulk Grade? Request Custom Synthesis Quote

BenchChem

Our mission is to be the trusted global source of essential and advanced chemicals, empowering scientists and researchers to drive progress in science and industry.

Contact

Address: 3281 E Guasti Rd

Ontario, CA 91761, United States

Phone: (601) 213-4426

Email: info@benchchem.com

Contact our Ph.D. Support Team for a compatibility check

© 2026 BenchChem. All rights reserved.