Technical Support Center: CuAAC with Boc-Protected Amino Acids

Author: BenchChem Technical Support Team. **Date**: May 2026

Compound of Interest

Compound Name:	*Methyl 2-((tert-butoxycarbonyl)amino)pent-4-ynoate*
CAS No.:	*173306-82-6*
Cat. No.:	*B071248*

Get Quote

Welcome to the Technical Support Center for Copper-Catalyzed Azide-Alkyne Cycloaddition (CuAAC) involving Boc-protected amino acids. This guide is designed for researchers, scientists, and drug development professionals to navigate and troubleshoot common side reactions and challenges encountered during this powerful bioconjugation technique. As Senior Application Scientists, we provide not just protocols, but the underlying scientific principles to empower you to optimize your reactions for maximal yield and purity.

Frequently Asked Questions (FAQs)

Here we address some of the most common questions and issues that arise during the CuAAC conjugation of Boc-protected amino acids.

Q1: I'm observing low yields in my CuAAC reaction with a Boc-protected amino acid. What are the likely causes?

© 2026 BenchChem. All rights reserved.

A1: Low yields can stem from several factors. The most common culprits are the deactivation of the copper catalyst through oxidation from Cu(I) to the inactive Cu(II) state, steric hindrance around the alkyne or azide functional groups, or the use of inhibitory buffer components.[1][2] Additionally, ensure your reagents, particularly the azide and alkyne, are of high purity.

Q2: My peptide, containing sensitive amino acids like Met, Cys, or Tyr, appears to be degrading during the reaction. What's happening and how can I prevent it?

A2: The combination of a copper salt and a reducing agent like sodium ascorbate can generate reactive oxygen species (ROS) in the presence of dissolved oxygen.[1][3] These ROS can oxidize electron-rich amino acid side chains. To mitigate this, it is crucial to degas all your solutions thoroughly and consider using a copper-chelating ligand such as THPTA, which can help protect your biomolecule from copper-mediated damage.[4][5]

Q3: I'm seeing an unexpected byproduct with a mass corresponding to a dimer of my alkyne-containing amino acid. What is this side reaction?

A3: This is likely due to the Glaser-Hay homocoupling of your terminal alkyne.[3][6] This side reaction is catalyzed by Cu(II) ions. Ensuring that your copper is maintained in the catalytically active Cu(I) state by using an adequate amount of a reducing agent like sodium ascorbate and a stabilizing ligand will minimize the formation of this diyne byproduct.[7]

Q4: Can the Boc protecting group be cleaved under standard CuAAC conditions?

A4: Generally, the tert-butyloxycarbonyl (Boc) protecting group is stable under the neutral to slightly basic pH conditions (typically pH 7-8) used for CuAAC reactions.[8] Standard CuAAC protocols do not employ the strong acidic conditions (like TFA) that are required for Boc deprotection.[9][10]

Q5: My reaction mixture turns cloudy or a precipitate forms over time. What could be the cause?

A5: Precipitate formation can be due to several reasons. It could be the aggregation of your peptide or amino acid derivative, especially at high concentrations or if the reaction conditions lead to oxidative cross-linking.[1][4] Another possibility is the formation of insoluble copper complexes, particularly in phosphate-containing buffers.[5] Using a ligand and ensuring proper reagent concentrations can help maintain solubility.

© 2026 BenchChem. All rights reserved.

Troubleshooting Guide

This section provides a more in-depth analysis of common problems, their underlying causes, and step-by-step protocols to resolve them.

Issue 1: Low Reaction Yield or Stalled Reaction

Symptoms:

- LC-MS analysis shows a significant amount of unreacted starting materials.
- The reaction does not proceed to completion even with extended reaction times.

Potential Causes & Solutions:

© 2026 BenchChem. All rights reserved.

Potential Cause	Scientific Explanation	Troubleshooting Steps & Protocol
Oxidation of Cu(I) Catalyst	The active catalyst in CuAAC is Cu(I). Dissolved oxygen in the reaction mixture can oxidize Cu(I) to the inactive Cu(II) state, effectively halting the catalytic cycle.[1]	Solution: Thoroughly degas all buffers and reagent solutions. Work under an inert atmosphere (e.g., nitrogen or argon) if possible. Ensure a sufficient excess of a reducing agent like sodium ascorbate is present to regenerate Cu(I).[7]
Copper Chelation by Amino Acid	The free amine, carboxylate, or certain side chains of the amino acid can chelate the copper catalyst, reducing its availability for the cycloaddition reaction.[3]	Solution: The use of a copper-stabilizing ligand, such as THPTA or TBTA, is highly recommended. These ligands form stable complexes with Cu(I), preventing unwanted chelation by the amino acid while maintaining catalytic activity.[4][11]
Steric Hindrance	Bulky groups near the azide or alkyne can impede the approach of the reactants to the copper center, slowing down the reaction rate.[1]	Solution: Increase the reaction time and/or temperature (e.g., from room temperature to 37°C). You can also try increasing the concentration of the less sterically hindered reaction partner.
Inhibitory Buffer Components	Buffers containing strong chelators (e.g., Tris) or thiols (e.g., DTT) can interfere with the copper catalyst.[1] High concentrations of chloride ions can also be inhibitory.[5]	Solution: Switch to a non-coordinating buffer system like HEPES or PBS. If a reducing agent like DTT is required for protein stability, it should be removed via dialysis or buffer exchange prior to the CuAAC reaction.[1]

© 2026 BenchChem. All rights reserved.

Issue 2: Observation of Byproducts and Peptide Degradation

Symptoms:

- HPLC or LC-MS analysis reveals unexpected peaks in the chromatogram.
- Mass spectrometry data indicates modification or degradation of the amino acid or peptide.

Potential Causes & Solutions:

© 2026 BenchChem. All rights reserved.

Potential Cause	Scientific Explanation	Troubleshooting Steps & Protocol
Oxidative Damage to Amino Acids	The Cu(I)/ascorbate/O_2 system can generate reactive oxygen species (ROS) that oxidize susceptible residues like Met, Cys, Tyr, and His.[1][11]	Solution: Degas all solutions meticulously. Use a protective, water-soluble ligand like THPTA, which can act as a sacrificial reductant.[5] Adding a scavenger like aminoguanidine can also help by intercepting byproducts of ascorbate oxidation that might otherwise modify arginine residues.[4][12]
Alkyne Homocoupling (Glaser Coupling)	The presence of Cu(II) ions can lead to the oxidative coupling of two terminal alkyne molecules to form a diyne byproduct.[3][13]	Solution: Minimize the concentration of Cu(II) by using a sufficient excess of sodium ascorbate and a Cu(I)-stabilizing ligand. Ensure your copper source is of high quality.
Ascorbate-Mediated Modification	Byproducts of ascorbate oxidation, such as dehydroascorbic acid, can react with the side chains of lysine and arginine residues, leading to unwanted covalent modifications.[14]	Solution: Use aminoguanidine as an additive to scavenge these reactive byproducts.[14] Use the minimum effective concentrations of copper and ascorbate.

Visualizing the CuAAC Catalytic Cycle and Side Reactions

The following diagram illustrates the main catalytic cycle of the CuAAC reaction and the major off-target pathways that can lead to side products.

© 2026 BenchChem. All rights reserved.

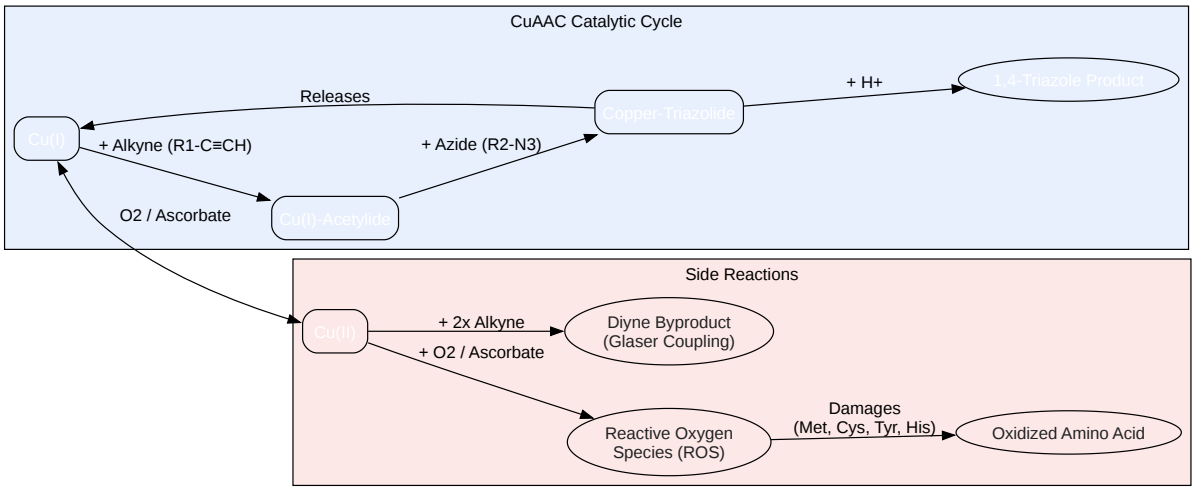

Click to download full resolution via product page

Caption: Catalytic cycle of CuAAC and competing side reactions.

Experimental Protocols

Protocol 1: General CuAAC for Boc-Protected Amino Acids

This protocol provides a starting point for the CuAAC reaction. Concentrations may need to be optimized depending on the specific substrates.

Materials:

© 2026 BenchChem. All rights reserved.

- Boc-protected amino acid with alkyne or azide functionality
- Azide or alkyne counterpart
- Copper(II) sulfate ($CuSO_4$) stock solution (e.g., 50 mM in water)
- Sodium ascorbate stock solution (e.g., 1 M in water, freshly prepared)
- Tris(3-hydroxypropyltriazolylmethyl)amine (THPTA) stock solution (e.g., 100 mM in water)
- Buffer (e.g., 100 mM HEPES, pH 7.5)
- Degassed solvents (e.g., water, DMSO, or DMF)

Procedure:

- In a microcentrifuge tube, dissolve the Boc-amino acid (1 equivalent) and its reaction partner (1.1 equivalents) in the chosen buffer/solvent system.
- Add THPTA to the reaction mixture to a final concentration of 5 mM.
- Add $CuSO_4$ to a final concentration of 1 mM.
- Initiate the reaction by adding freshly prepared sodium ascorbate to a final concentration of 10 mM.
- Vortex the mixture gently and allow the reaction to proceed at room temperature for 1-4 hours. For sterically hindered substrates, incubation overnight at 4°C or for a shorter period at 37°C may be beneficial.
- Monitor the reaction progress by LC-MS or HPLC.
- Once complete, the product can be purified by standard chromatographic techniques.

Protocol 2: Analysis of Amino Acid Integrity Post-CuAAC

© 2026 BenchChem. All rights reserved.

To verify that the amino acid structure, particularly sensitive side chains, has not been compromised during the CuAAC reaction, an amino acid analysis can be performed on the purified product after Boc deprotection and hydrolysis.

Materials:

- Purified CuAAC product
- 6 M HCl
- Derivatization reagents (e.g., OPA/FMOC)
- HPLC system with a fluorescence or UV detector
- Amino acid standards

Procedure:

- Deprotection & Hydrolysis:
  - Treat the purified product with a standard Boc-deprotection cocktail (e.g., 50% TFA in DCM) and isolate the deprotected product.
  - Place the deprotected product in a hydrolysis tube, add 6 M HCl, and heat at 110°C for 24 hours under vacuum.
  - After hydrolysis, evaporate the HCl under vacuum.
- Derivatization:
  - Reconstitute the dried hydrolysate in a suitable buffer.
  - Derivatize the amino acids using a standard protocol, such as with OPA for primary amines and FMOC for secondary amines.[15]
- HPLC Analysis:
  - Inject the derivatized sample onto an amino acid analysis column.

© 2026 BenchChem. All rights reserved.

- Run a gradient elution program designed for amino acid separation.[16]
- Compare the resulting chromatogram to that of a standard mixture of amino acids to quantify the recovery of each amino acid and identify any potential degradation products.

Visualizing the Troubleshooting Workflow

This diagram outlines a logical workflow for troubleshooting common CuAAC issues.

© 2026 BenchChem. All rights reserved.

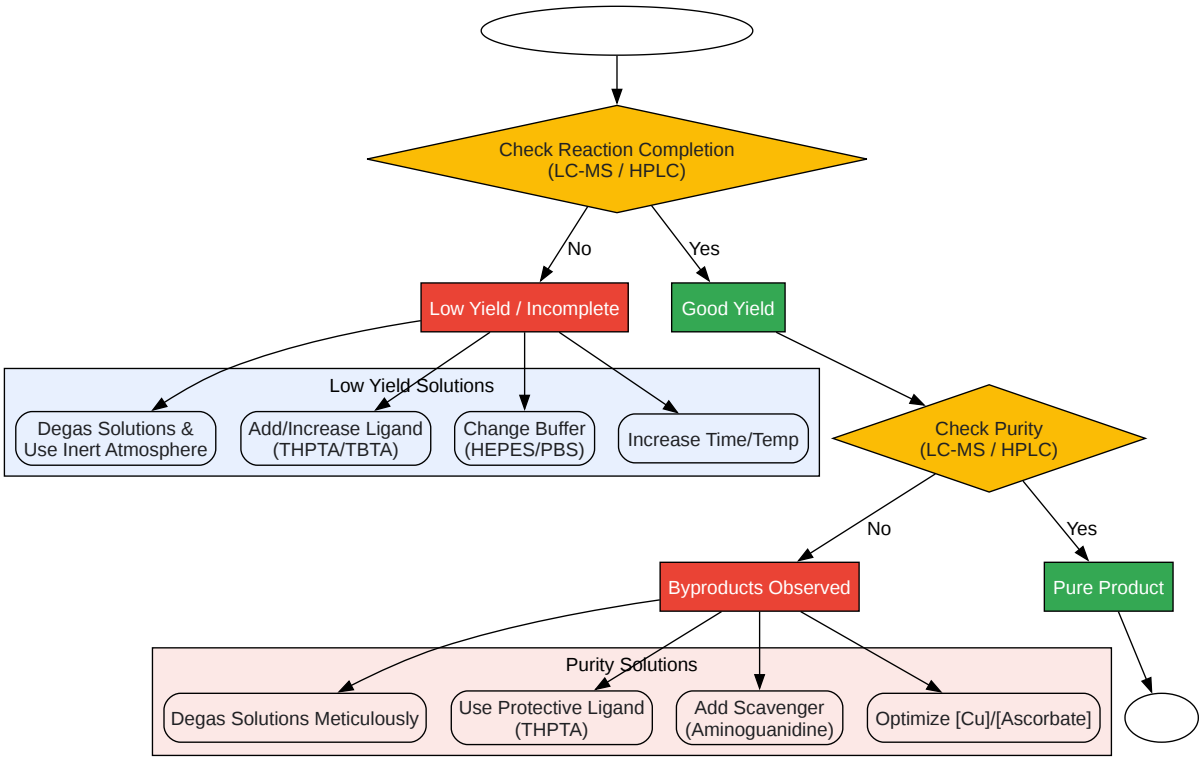

Click to download full resolution via product page

Caption: A logical workflow for troubleshooting CuAAC reactions.

© 2026 BenchChem. All rights reserved.

References

- Practical Considerations, Challenges, and Limitations of Bioconjugation via Azide-Alkyne Cycloaddition - PMC - NIH. Available at: [Link]
- Copper-catalyzed azide–alkyne cycloaddition (CuAAC) and beyond: new reactivity of copper(i) acetylides - PMC - PubMed Central. Available at: [Link]
- Concerted Cycloaddition Mechanism in the CuAAC Reaction Catalyzed by 1,8-Naphthyridine Dicopper Complexes - ACS Publications. Available at: [Link]
- Copper-Catalyzed Azide–Alkyne Click Chemistry for Bioconjugation - PMC - NIH. Available at: [Link]
- Development and Applications of the Copper-Catalyzed Azide-Alkyne Cycloaddition (CuAAC) as a Bioorthogonal Reaction - PMC - PubMed Central. Available at: [Link]
- Click Chemistry Azide-Alkyne Cycloaddition. Available at: [Link]
- A general mechanism for the triazole formation, as proposed by Sakai. - ResearchGate. Available at: [Link]
- Mechanism of Copper(I)-Catalyzed 5-Iodo-1,2,3-triazole Formation from Azide and Terminal Alkyne - PubMed. Available at: [Link]
- Modification of Protein Scaffolds via Copper-Catalyzed Azide–Alkyne Cycloaddition. Available at: [Link]
- Peptide Conjugation via CuAAC 'Click' Chemistry - PMC - NIH. Available at: [Link]
- Analysis and Optimization of Copper-Catalyzed Azide–Alkyne Cycloaddition for Bioconjugation - PMC - PubMed Central. Available at: [Link]
- Copper–ligand clusters dictate size of cyclized peptide formed during alkyne–azide cycloaddition on solid support - RSC Publishing. Available at: [Link]
- Why is the efficiency of my CuAAC click chemistry so low? - ResearchGate. Available at: [Link]

© 2026 BenchChem. All rights reserved.

- Fluorophore-Assisted Click Chemistry through Copper(I) Complexation - PMC - NIH. Available at: [Link]
- Cu-Catalyzed Azide−Alkyne Cycloaddition | Chemical Reviews - ACS Publications. Available at: [Link]
- Modification of Protein Scaffolds via Copper-Catalyzed Azide–Alkyne Cycloaddition. Available at: [Link]
- Boc deprotection conditions tested. | Download Scientific Diagram - ResearchGate. Available at: [Link]
- Side reactions of macromonomers under CuAAC condition. - ResearchGate. Available at: [Link]
- Boc Protection - Common Conditions. Available at: [Link]
- Click Chemistry in Peptide-Based Drug Design - PMC - NIH. Available at: [Link]
- Mild deprotection of the N-tert-butyloxycarbonyl (N-Boc) group using oxalyl chloride - NIH. Available at: [Link]
- Any suggestion on Boc deprotection without using acid? - ResearchGate. Available at: [Link]
- Copper, Nickel, and Zinc Cyclam−Amino Acid and Cyclam−Peptide Complexes May Be Synthesized with 'Click' Chemistry and Are Noncytotoxic - University of Southern Queensland Repository. Available at: [Link]
- Copper, Nickel, and Zinc Cyclam-Amino Acid and Cyclam-Peptide Complexes May Be Synthesized with "Click" Chemistry and Are Noncytotoxic | Request PDF - ResearchGate. Available at: [Link]
- Click Chemistry (CuAAC) and Detection of Tagged de novo Synthesized Proteins in Drosophila - PMC - PubMed Central. Available at: [Link]
- Peptide Conjugation via CuAAC 'Click' Chemistry - MDPI. Available at: [Link]
- Boc Deprotection Mechanism | Organic Chemistry - YouTube. Available at: [Link]

© 2026 BenchChem. All rights reserved.

- Anaerobic conditions to reduce oxidation of proteins and to accelerate the copper-catalyzed “Click” reaction with a water-soluble bis(triazole) ligand - NIH. Available at: [Link]
- Amino Acid Analysis - Agilent. Available at: [Link]

Need Custom Synthesis?

BenchChem offers custom synthesis for rare earth carbides and specific isotopiclabeling.

Email: info@benchchem.com or Request Quote Online.

Sources

- 1. pdf.benchchem.com [pdf.benchchem.com]
- 2. researchgate.net [researchgate.net]
- 3. Development and Applications of the Copper-Catalyzed Azide-Alkyne Cycloaddition (CuAAC) as a Bioorthogonal Reaction - PMC [pmc.ncbi.nlm.nih.gov]
- 4. pdf.benchchem.com [pdf.benchchem.com]
- 5. Copper-Catalyzed Azide–Alkyne Click Chemistry for Bioconjugation - PMC [pmc.ncbi.nlm.nih.gov]
- 6. pubs.acs.org [pubs.acs.org]
- 7. Copper-catalyzed azide–alkyne cycloaddition (CuAAC) and beyond: new reactivity of copper(i) acetylides - PMC [pmc.ncbi.nlm.nih.gov]
- 8. Click Chemistry [organic-chemistry.org]
- 9. researchgate.net [researchgate.net]
- 10. Mild deprotection of the N-tert-butyloxycarbonyl (N-Boc) group using oxalyl chloride - PMC [pmc.ncbi.nlm.nih.gov]
- 11. Practical Considerations, Challenges, and Limitations of Bioconjugation via Azide-Alkyne Cycloaddition - PMC [pmc.ncbi.nlm.nih.gov]
- 12. Modification of Protein Scaffolds via Copper-Catalyzed Azide–Alkyne Cycloaddition | Springer Nature Experiments [experiments.springernature.com]
- 13. researchgate.net [researchgate.net]
- 14. Analysis and Optimization of Copper-Catalyzed Azide–Alkyne Cycloaddition for Bioconjugation - PMC [pmc.ncbi.nlm.nih.gov]

© 2026 BenchChem. All rights reserved.

- 15. agilent.com [agilent.com]
- 16. Amino Acid Analysis Methods - Creative Proteomics [creative-proteomics.com]
- To cite this document: BenchChem. [Technical Support Center: CuAAC with Boc-Protected Amino Acids]. BenchChem, [2026]. [Online PDF]. Available at: [https://www.benchchem.com/product/b071248/docs#technical-support-center-cuaac-with-boc-protected-amino-acids]

Disclaimer & Data Validity:

The information provided in this document is for Research Use Only (RUO) and is strictly not intended for diagnostic or therapeutic procedures. While BenchChem strives to provide accurate protocols, we make no warranties, express or implied, regarding the fitness of this product for every specific experimental setup.

Technical Support: The protocols provided are for reference purposes. Unsure if this reagent suits your experiment?

Need Industrial/Bulk Grade? Request Custom Synthesis Quote

BenchChem

Our mission is to be the trusted global source of essential and advanced chemicals, empowering scientists and researchers to drive progress in science and industry.

Contact

Address: 3281 E Guasti Rd

Ontario, CA 91761, United States

Phone: (601) 213-4426

Email: info@benchchem.com

Contact our Ph.D. Support Team for a compatibility check

© 2026 BenchChem. All rights reserved.