(2R)-SR59230A: A Comprehensive Technical Guide to its Discovery and Development

Author: BenchChem Technical Support Team. **Date**: April 2026

Compound of Interest

Compound Name:	*(2R)-SR59230A*
CAS No.:	*174689-39-5*
Cat. No.:	*B071150*

Get Quote

An In-depth Technical Guide for Researchers, Scientists, and Drug Development Professionals

Introduction

(2R)-SR59230A, chemically known as 3-(2-ethylphenoxy)-1-[(1S)-1,2,3,4-tetrahydronaphth-1-ylamino]-(2S)-2-propanol oxalate, is a pharmacological tool that has been instrumental in the characterization of the β3-adrenoceptor. Initially developed as the first selective antagonist for this receptor subtype, subsequent research has revealed a more complex pharmacological profile, including partial agonism and biased signaling. This guide provides a detailed history of its discovery and development, encompassing its synthesis, chiral resolution, and extensive pharmacological characterization through a variety of in vitro and in vivo experimental protocols.

Discovery and Synthesis

The development of SR59230A emerged from the quest for selective ligands for the then newly identified β3-adrenoceptor. The synthesis of SR59230A, an aryloxypropanolamine derivative, follows a general synthetic pathway for this class of compounds.

© 2026 BenchChem. All rights reserved.

Experimental Protocol: Synthesis of Racemic SR59230A

A plausible synthetic route for racemic SR59230A involves a two-step process:

- Epoxide Formation: 2-Ethylphenol is reacted with epichlorohydrin in the presence of a base, such as sodium hydride, to form the corresponding glycidyl ether, 1-(2-ethylphenoxy)-2,3-epoxypropane.

- Ring Opening: The resulting epoxide is then subjected to a ring-opening reaction with (S)-1,2,3,4-tetrahydro-1-naphthylamine. This reaction typically occurs in a protic solvent like ethanol or isopropanol at elevated temperatures. The amino group of the tetrahydronaphthylamine derivative attacks the least sterically hindered carbon of the epoxide ring, yielding the racemic mixture of 3-(2-ethylphenoxy)-1-[(1S)-1,2,3,4-tetrahydronaphth-1-ylamino]-2-propanol.

The final product is then typically purified by column chromatography and can be converted to its oxalate salt for improved stability and handling.

Chiral Resolution

The biological activity of SR59230A resides primarily in the (2R)-enantiomer. Therefore, the separation of the racemic mixture is a critical step in its development. Preparative high-performance liquid chromatography (HPLC) using a chiral stationary phase is the most common method for achieving this separation.

Experimental Protocol: Chiral HPLC Separation of SR59230A Enantiomers

- Chromatographic System: A preparative HPLC system equipped with a UV detector.

- Chiral Stationary Phase (CSP): A polysaccharide-based CSP, such as amylose tris(3,5-dimethylphenylcarbamate) immobilized on silica gel (e.g., Chiralpak® AD).

- Mobile Phase: A mixture of a non-polar solvent (e.g., hexane or heptane) and an alcohol modifier (e.g., isopropanol or ethanol) in a suitable ratio (e.g., 90:10 v/v). A small amount of an amine modifier, such as diethylamine (DEA), is often added to the mobile phase to improve peak shape and resolution of basic compounds like SR59230A.

© 2026 BenchChem. All rights reserved.

- Flow Rate: The flow rate is optimized for the specific column dimensions to achieve efficient separation.
- Detection: UV detection at a wavelength where the compound exhibits strong absorbance (e.g., 220 nm).
- Procedure:
  - The racemic SR59230A is dissolved in the mobile phase.
  - The solution is injected onto the chiral column.
  - The enantiomers are separated based on their differential interaction with the chiral stationary phase.
  - Fractions corresponding to each enantiomeric peak are collected.
  - The collected fractions are evaporated to yield the separated enantiomers.
  - The enantiomeric purity of each fraction is confirmed using analytical chiral HPLC.

Pharmacological Characterization

The pharmacological profile of **(2R)-SR59230A** has been extensively studied using a variety of in vitro and in vivo assays. These studies have revealed its complex interactions with the β3-adrenoceptor and other receptors.

In Vitro Studies

Binding Affinity:

Radioligand binding assays are used to determine the affinity of a compound for a specific receptor. In these assays, a radiolabeled ligand with known high affinity for the receptor is competed with increasing concentrations of the unlabeled test compound.

- Materials:

© 2026 BenchChem. All rights reserved.

- Cell membranes prepared from cells expressing the desired β-adrenoceptor subtype (β1, β2, or β3).
- Radioligand: [^{125}I]-iodocyanopindolol (for β1 and β2) or [^{3}H]-CGP 12177 (for β3).
- Non-specific binding control: Propranolol (a non-selective β-blocker).
- Assay buffer (e.g., Tris-HCl with $MgCl_2$).
- **(2R)-SR59230A** at various concentrations.

- Procedure:
  - Cell membranes are incubated with the radioligand and varying concentrations of **(2R)-SR59230A**.
  - A parallel set of incubations is performed in the presence of a high concentration of propranolol to determine non-specific binding.
  - After incubation to reach equilibrium, the bound and free radioligand are separated by rapid filtration through glass fiber filters.
  - The radioactivity retained on the filters is measured using a gamma or scintillation counter.
  - Specific binding is calculated by subtracting non-specific binding from total binding.
  - The concentration of **(2R)-SR59230A** that inhibits 50% of the specific binding of the radioligand (IC_{50}) is determined.
  - The inhibition constant (Ki) is calculated from the IC_{50} value using the Cheng-Prusoff equation.

Table 1: In Vitro Binding Affinities and Functional Antagonism of **(2R)-SR59230A**

© 2026 BenchChem. All rights reserved.

Receptor Subtype	Binding Affinity (Ki/IC_{50}, nM)	Functional Antagonism (pA_2/pKb)
β3-Adrenoceptor	40	8.31 - 8.87[1]
β1-Adrenoceptor	408	-
β2-Adrenoceptor	648	-
α1-Adrenoceptor	Potent antagonist activity observed	-

Note: pA_2 and pKb values represent the negative logarithm of the molar concentration of an antagonist that produces a 2-fold shift in the concentration-response curve of an agonist.

Functional Assays:

Functional assays measure the biological response elicited by a compound upon binding to its receptor. These assays have been crucial in elucidating the dual antagonist and partial agonist properties of **(2R)-SR59230A**.

- cAMP Accumulation Assay: The β3-adrenoceptor is a Gs-protein coupled receptor, and its activation leads to an increase in intracellular cyclic adenosine monophosphate (cAMP).
- Cell Culture: Cells expressing the β3-adrenoceptor (e.g., Chinese Hamster Ovary - CHO cells) are cultured in appropriate media.
- Procedure:
  - Cells are pre-incubated with a phosphodiesterase inhibitor (e.g., IBMX) to prevent cAMP degradation.
  - Cells are then treated with **(2R)-SR59230A** alone (to test for agonist activity) or in combination with a known β3-agonist (e.g., isoproterenol or CL316243) (to test for antagonist activity).
  - The reaction is stopped, and the cells are lysed.

© 2026 BenchChem. All rights reserved.

- The intracellular cAMP concentration is measured using a competitive radioimmunoassay (RIA) kit, where [^{125}I]-labeled cAMP competes with the sample cAMP for binding to a specific antibody.
- The amount of radioactivity is inversely proportional to the amount of cAMP in the sample.

- Extracellular Acidification Rate (ECAR) Assay: This assay measures the rate at which cells release acidic products, primarily lactate from glycolysis, into the extracellular medium. It provides an alternative readout of cellular metabolic activity.
- Instrumentation: A Cytosensor Microphysiometer is used to measure changes in the pH of the extracellular medium in real-time.
- Procedure:
  - Cells expressing the β3-adrenoceptor are seeded into microphysiometer capsules.
  - The cells are exposed to a low-buffer medium.
  - The baseline ECAR is measured.
  - Cells are then exposed to **(2R)-SR59230A** or other compounds, and the change in ECAR is recorded.

Studies have shown that while **(2R)-SR59230A** acts as an antagonist in cAMP accumulation assays in some cell systems, it can behave as a full agonist in stimulating ECAR, suggesting it can activate different signaling pathways.[2]

- MAP Kinase Activation Assay: Mitogen-activated protein kinases (MAPKs), such as p38 MAPK and Erk1/2, are involved in various cellular processes and can be activated by β3-adrenoceptor signaling.
- Cell Treatment and Lysis: Cells are treated with **(2R)-SR59230A** for various times. After treatment, cells are lysed to extract total protein.
- Procedure:
  - Protein concentration in the lysates is determined.

© 2026 BenchChem. All rights reserved.

- Equal amounts of protein are separated by SDS-PAGE.
- The separated proteins are transferred to a membrane (e.g., PVDF).
- The membrane is blocked to prevent non-specific antibody binding.
- The membrane is incubated with primary antibodies specific for the phosphorylated (activated) forms of p38 MAPK and Erk1/2.
- The membrane is then incubated with a horseradish peroxidase (HRP)-conjugated secondary antibody.
- The protein bands are visualized using an enhanced chemiluminescence (ECL) detection system.
- The membrane is often stripped and re-probed with antibodies for total p38 MAPK and Erk1/2 to normalize for protein loading.

Research has demonstrated that **(2R)-SR59230A** can potently activate p38 MAPK and Erk1/2 phosphorylation, even in systems where it antagonizes cAMP accumulation, further supporting the concept of biased agonism.[3]

In Vivo Studies

In vivo studies have been conducted in various animal models to investigate the physiological effects of **(2R)-SR59230A**.

Table 2: Summary of In Vivo Effects of **(2R)-SR59230A**

© 2026 BenchChem. All rights reserved.

Animal Model	Dose and Administration	Observed Effects	Reference
Rats	1, 5, or 10 mg/kg, i.p.	Dose-dependent decrease in brown adipose tissue, body, and brain temperatures.	[4]
Rats (Monocrotaline-induced pulmonary arterial hypertension)	Chronic treatment	Improved right ventricular function.	[5]
Type 2 diabetic GK rats	0.6 mg/kg/day via osmotic pumps	Normalized the increased pancreatic islet blood flow.	[6]

These studies highlight the diverse physiological roles of the β3-adrenoceptor and the utility of **(2R)-SR59230A** in probing these functions.

Signaling Pathways and Biased Agonism

The discovery that **(2R)-SR59230A** can act as both an antagonist and an agonist at the β3-adrenoceptor, depending on the signaling pathway measured, was a pivotal point in its development history. This phenomenon, known as biased agonism or functional selectivity, implies that a ligand can stabilize different conformational states of a receptor, leading to the activation of distinct downstream signaling cascades.

In the case of the β3-adrenoceptor, agonist binding typically leads to Gs protein activation and subsequent adenylyl cyclase stimulation, resulting in cAMP production. However, the receptor can also couple to other signaling pathways, including those involving p38 MAPK and Erk1/2. **(2R)-SR59230A** appears to preferentially activate these latter pathways while blocking the canonical Gs-cAMP pathway in certain cellular contexts.

© 2026 BenchChem. All rights reserved.

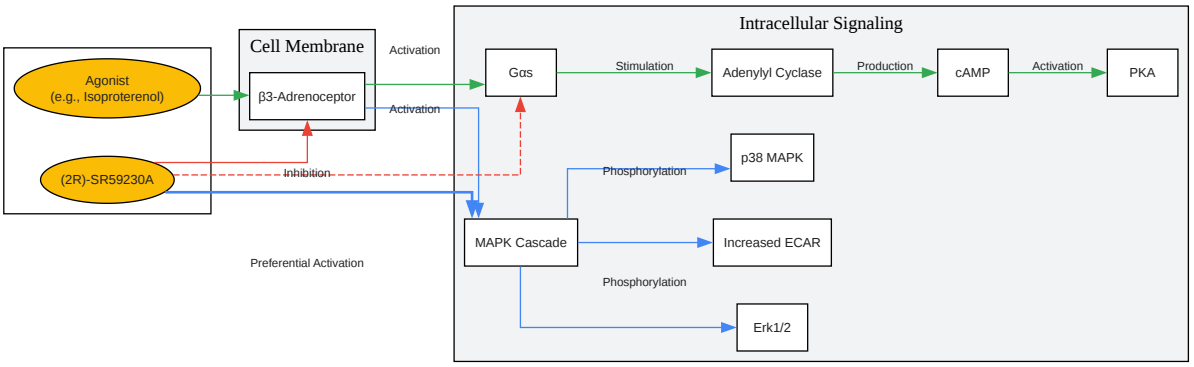

Click to download full resolution via product page

Caption: Biased agonism of **(2R)-SR59230A** at the β3-adrenoceptor.

© 2026 BenchChem. All rights reserved.

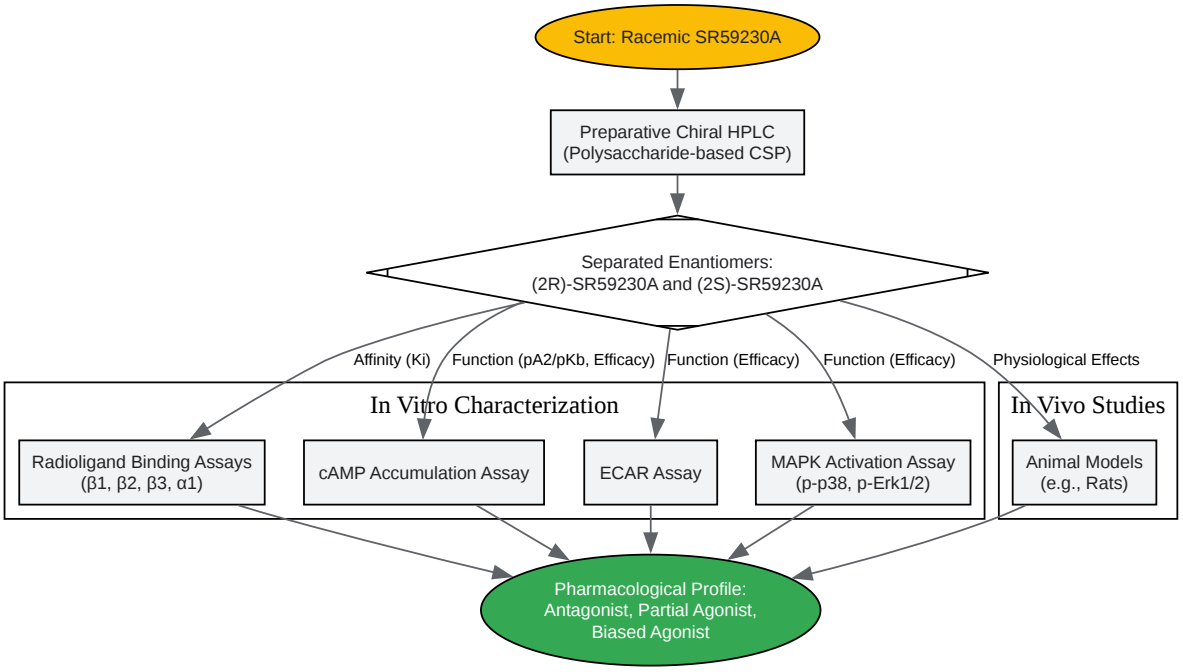

Click to download full resolution via product page

Caption: Experimental workflow for the development and characterization of **(2R)-SR59230A**.

Conclusion

The discovery and development of **(2R)-SR59230A** represent a significant milestone in adrenoceptor pharmacology. Initially lauded as the first selective β3-adrenoceptor antagonist, its journey has unveiled the intricate nature of receptor signaling, particularly the concept of biased agonism. This comprehensive guide has detailed its synthesis, chiral separation, and the key experimental protocols that have been instrumental in defining its complex pharmacological profile. **(2R)-SR59230A** continues to be a valuable tool for researchers investigating the physiological and pathophysiological roles of the β3-adrenoceptor and the nuanced mechanisms of G-protein coupled receptor signaling. Its history underscores the importance of thorough pharmacological characterization in drug discovery and development.

© 2026 BenchChem. All rights reserved.

Need Custom Synthesis?

BenchChem offers custom synthesis for rare earth carbides and specific isotopiclabeling.

Email: info@benchchem.com or Request Quote Online.

References

- 1. researchgate.net [researchgate.net]
- 2. phx.phenomenex.com [phx.phenomenex.com]
- 3. researchgate.net [researchgate.net]
- 4. Overview on the Synthesis of (S)-3-(Methyl-Amino)-1-(Thiophen-2-yl) Propan-1-ol | Semantic Scholar [semanticscholar.org]
- 5. mdpi.com [mdpi.com]
- 6. Chiral Separations in Preparative Scale: A Medicinal Chemistry Point of View - PMC [pmc.ncbi.nlm.nih.gov]

- To cite this document: BenchChem. [(2R)-SR59230A: A Comprehensive Technical Guide to its Discovery and Development]. BenchChem, [2026]. [Online PDF]. Available at: [https://www.benchchem.com/product/b071150/docs#2r-sr59230a-a-comprehensive-technical-guide-to-its-discovery-and-development]

Disclaimer & Data Validity:

The information provided in this document is for Research Use Only (RUO) and is strictly not intended for diagnostic or therapeutic procedures. While BenchChem strives to provide accurate protocols, we make no warranties, express or implied, regarding the fitness of this product for every specific experimental setup.

Technical Support: The protocols provided are for reference purposes. Unsure if this reagent suits your experiment?

Need Industrial/Bulk Grade? Request Custom Synthesis Quote

© 2026 BenchChem. All rights reserved.

BenchChem

Our mission is to be the trusted global source of essential and advanced chemicals, empowering scientists and researchers to drive progress in science and industry.

Contact

Address: 3281 E Guasti Rd

Ontario, CA 91761, United States

Phone: (601) 213-4426

Email: info@benchchem.com

Contact our Ph.D. Support Team for a compatibility check

© 2026 BenchChem. All rights reserved.