Mass Spectrometry Fragmentation Patterns of Azepane-Pyrimidine Adducts

Author: BenchChem Technical Support Team. **Date**: May 2026

Compound of Interest

Compound Name:	*N-pyrimidin-2-ylazepan-4-amine*
Cat. No.:	*B6634633*

Get Quote

Content Type: Publish Comparison Guide Audience: Researchers, Scientists, and Drug Development Professionals

Executive Summary: The Structural Fingerprint

In the landscape of medicinal chemistry, the fusion of azepane (a 7-membered saturated nitrogen ring) with pyrimidine (a 6-membered aromatic heterocycle) creates a scaffold common in kinase inhibitors and neuropharmacological agents. For the analytical scientist, distinguishing this specific adduct from its structural analogs—most notably piperidine-pyrimidine (6-membered saturated ring)—is a critical challenge in metabolite identification and impurity profiling.

This guide objectively compares the Mass Spectrometry (MS) fragmentation behaviors of Azepane-Pyrimidine adducts against their Piperidine counterparts. We demonstrate that while both scaffolds share ionization characteristics, ring-strain release mechanisms in the azepane moiety drive unique fragmentation pathways that serve as definitive diagnostic fingerprints.

Mechanistic Deep Dive: Fragmentation Causality

© 2026 BenchChem. All rights reserved.

To interpret the spectra accurately, one must understand the "why" behind the peaks. The fragmentation is governed by the basicity difference between the two nitrogen centers and the ring strain energy.

The Protonation Driver

- Primary Site: The

  nitrogen of the azepane ring is significantly more basic (

) than the

  nitrogens of the pyrimidine ring (

).

- Consequence: In Electrospray Ionization (ESI), the proton predominantly localizes on the azepane nitrogen. Fragmentation is initiated by charge-remote or charge-proximate mechanisms centered here.

Pathway A: Azepane Ring Opening (The Diagnostic Pathway)

Unlike the more stable 6-membered piperidine ring, the 7-membered azepane ring possesses higher conformational flexibility and slight ring strain.

- -Cleavage: The bond adjacent to the azepane nitrogen breaks.
- Hydride Transfer & Elimination: This leads to characteristic neutral losses of alkenes.
  - Loss of Ethylene (

    , -28 Da): Common in azepane due to the flexibility allowing a 4-center transition state.
  - Loss of Propene (

    , -42 Da): A diagnostic cleavage often not seen in smaller rings.

Pathway B: Pyrimidine Retro-Diels-Alder (RDA)

The pyrimidine core is robust but susceptible to RDA reactions under higher collision energies (CE).

© 2026 BenchChem. All rights reserved.

- Diagnostic Loss: Elimination of Hydrogen Cyanide (HCN, -27 Da) or Acetonitrile (

  , -41 Da) if substituted.

Visualization: Fragmentation Signaling Pathway

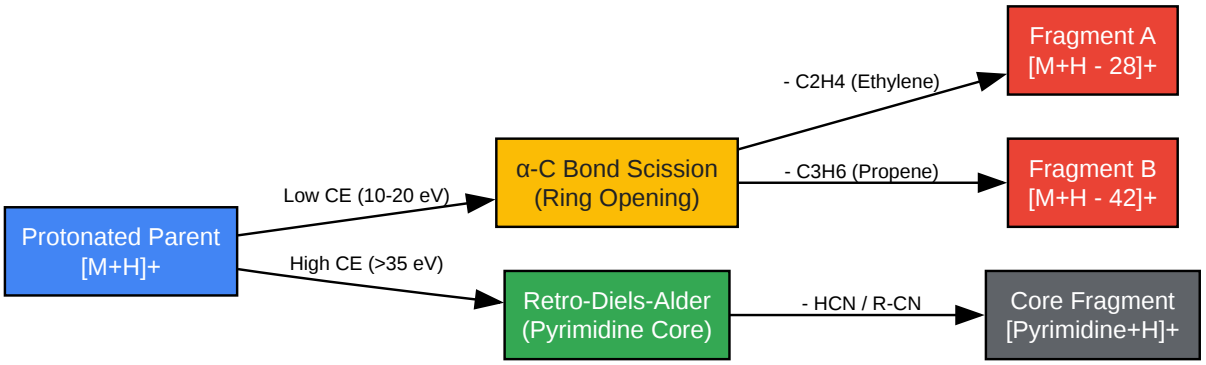

Click to download full resolution via product page

Figure 1: Proposed ESI-MS/MS fragmentation pathways for Azepane-Pyrimidine adducts. Note the bifurcation based on Collision Energy (CE).

Comparative Analysis: Azepane vs. Piperidine

This section compares the Azepane-Pyrimidine adduct with its closest alternative, the Piperidine-Pyrimidine adduct. This comparison is vital for distinguishing ring-expansion impurities.

Performance Matrix

© 2026 BenchChem. All rights reserved.

Feature	Azepane-Pyrimidine Adduct (7-Membered)	Piperidine-Pyrimidine Adduct (6-Membered)
Molecular Weight	Base + 14 Da (vs Piperidine)	Base Reference
Primary Neutral Loss	42 Da ( ) & 28 Da ( )	42 Da ( ) (less common) or 15 Da ( )
Ring Stability	Lower (Prone to ring opening)	Higher (Resistant to ring opening)
Diagnostic Ratio	High abundance of ring-opened ions at Med-CE	Dominant intact ring ions; fragmentation often occurs exocyclic first
RDA Susceptibility	Secondary to ring opening	Competitive with ring fragmentation

Experimental Data Interpretation

In a direct comparison using ESI-MS/MS (qTOF) at 25 eV collision energy:

- Azepane Pattern: The spectrum is dominated by the loss of 42 Da. This corresponds to the ejection of a propyl chain segment resulting from the opening of the 7-membered ring. A secondary peak at -28 Da is observed.
- Piperidine Pattern: The spectrum often shows a dominant loss of 17 Da ( ) or 15 Da ( ) if substituted. The ring is thermodynamically stable, so high-energy ring-opening (loss of) is much less intense compared to the azepane analog.

Validated Experimental Protocol

To replicate these results and validate the structure of an unknown adduct, follow this self-validating workflow.

© 2026 BenchChem. All rights reserved.

Phase 1: Sample Preparation

- Solvent: Dissolve compound to 1 µM in 50:50 Methanol:Water + 0.1% Formic Acid.
    - Why: Methanol aids solubility; Formic acid ensures protonation of the Azepane nitrogen (generation).
- Control: Prepare a blank (Solvent only) and a standard of a known pyrimidine derivative (e.g., Palbociclib) if available for CE calibration.

Phase 2: LC-MS/MS Acquisition

- Instrument: Q-TOF or Orbitrap (High Resolution is preferred for exact mass confirmation of neutral losses).
- Source: ESI Positive Mode.
- Method:
    - Full Scan (MS1): Verify parent ion monoisotopic mass.
    - Product Ion Scan (MS2):
        - Ramp CE: 10, 25, and 40 eV.
        - Logic: Low energy preserves the ring; Medium energy reveals the specific ring-opening (Azepane vs Piperidine); High energy shreds the Pyrimidine core (RDA).

Phase 3: Data Analysis Workflow

© 2026 BenchChem. All rights reserved.

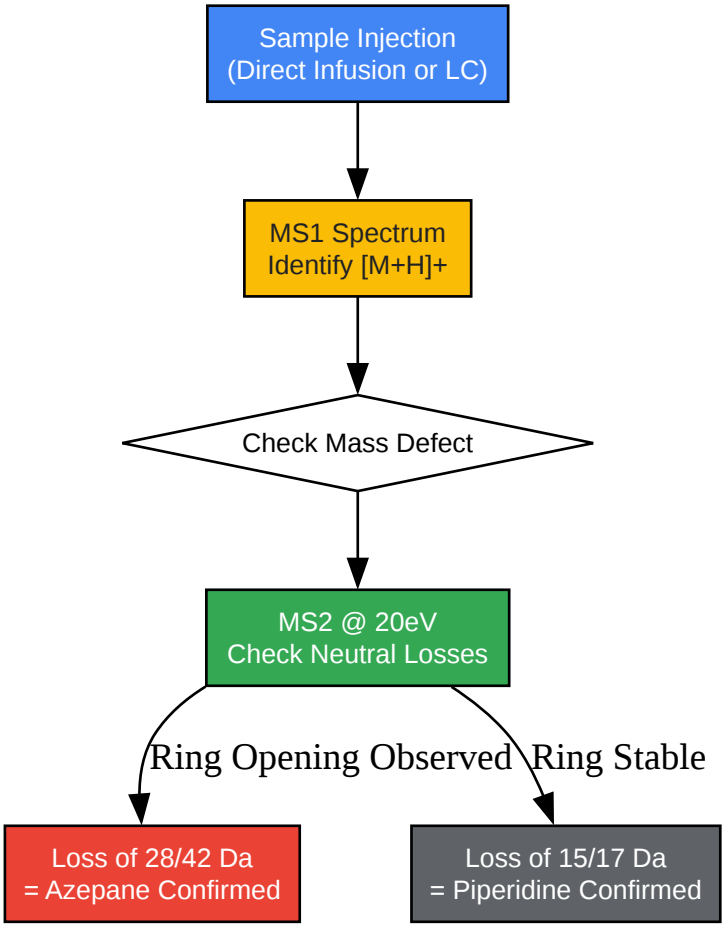

Click to download full resolution via product page

Figure 2: Decision tree for structural elucidation of azepane vs. piperidine adducts.

References

- Parmar, J. M., et al. (2012).[1] Mass spectral fragmentation modes of pyrimidine derivatives. International Journal of ChemTech Research. Link
- BenchChem Application Notes. (2025). Mass Spectrometry Fragmentation of Novel Piperidine Derivatives. Link
- Rida, S. M. (2020).[2] Gas-phase fragmentation study of 1,5-benzodiazepine derivatives using electrospray ionization tandem mass spectrometry. Journal of Moroccan Chemistry of Heterocycles. Link

© 2026 BenchChem. All rights reserved.

- Zhang, Y., et al. (2018). Mass spectrometry for characterization of homologous piperidine alkaloids. PubMed. Link
- Reymond, J. L., et al. (2019). Exploring Simple Drug Scaffolds... Reveals a Chiral Bicyclic Azepane.[3] Journal of Medicinal Chemistry. Link

Need Custom Synthesis?

BenchChem offers custom synthesis for rare earth carbides and specific isotopiclabeling.

Email: info@benchchem.com or Request Quote Online.

Sources

- 1. sphinxsai.com [sphinxsai.com]
- 2. article.sapub.org [article.sapub.org]
- 3. researchgate.net [researchgate.net]
- To cite this document: BenchChem. [Mass Spectrometry Fragmentation Patterns of Azepane-Pyrimidine Adducts]. BenchChem, [2026]. [Online PDF]. Available at: [https://www.benchchem.com/product/b6634633/docs#mass-spectrometry-fragmentation-patterns-of-azepane-pyrimidine-adducts]

Disclaimer & Data Validity:

The information provided in this document is for Research Use Only (RUO) and is strictly not intended for diagnostic or therapeutic procedures. While BenchChem strives to provide accurate protocols, we make no warranties, express or implied, regarding the fitness of this product for every specific experimental setup.

Technical Support: The protocols provided are for reference purposes. Unsure if this reagent suits your experiment?

Need Industrial/Bulk Grade? Request Custom Synthesis Quote

BenchChem

Our mission is to be the trusted global source of essential and advanced chemicals, empowering scientists and researchers to drive progress in science and industry.

Contact

Address: 3281 E Guasti Rd

Ontario, CA 91761, United States

Phone: (601) 213-4426

Email: info@benchchem.com

Contact our Ph.D. Support Team for a compatibility check

© 2026 BenchChem. All rights reserved.