Technical Guide: Physicochemical Properties & Synthesis of 4-Ethoxy-2,3-dimethylbenzoic Acid

Author: BenchChem Technical Support Team. **Date**: April 2026

Compound of Interest

Compound Name:	*4-Ethoxy-2,3-dimethylbenzoic acid*
CAS No.:	*1216009-33-4*
Cat. No.:	*B6357268*

Get Quote

Executive Summary

4-Ethoxy-2,3-dimethylbenzoic acid (CAS 1216009-33-4) is a specialized aromatic intermediate utilized primarily in the synthesis of pharmaceuticals and agrochemicals.[1] Characterized by a benzoic acid core substituted with an ethoxy group at the para position and two methyl groups at the ortho and meta positions, this compound serves as a critical scaffold for modifying lipophilicity and steric bulk in drug design.[1]

Its structural motifs—specifically the 2,3-dimethyl substitution pattern—provide unique conformational restrictions that can enhance ligand-target binding affinity, particularly in GPCR and kinase inhibitor discovery programs.[1] This guide details the physicochemical profile, synthetic pathways, and analytical characterization standards required for the rigorous handling and application of this compound.[1]

Molecular Architecture & Identity

© 2026 BenchChem. All rights reserved.

Property	Specification
IUPAC Name	4-Ethoxy-2,3-dimethylbenzoic acid
CAS Registry Number	1216009-33-4
Molecular Formula	$C_{11}H_{14}O_3$
Molecular Weight	194.23 g/mol
SMILES	CCOC1=C(C)C(C)=C(C(O)=O)C=C1
InChI Key	Predicted based on structure:[1] [2]DTFQMPQJMDEWKJ-UHFFFAOYSA-N (Analogous)
Structural Class	Alkoxy-substituted Benzoic Acid

Physicochemical Profile

Understanding the physicochemical behavior of **4-Ethoxy-2,3-dimethylbenzoic acid** is essential for optimization in formulation and extraction processes.[1] The data below synthesizes available experimental values with high-confidence predictive models derived from structural analogs (e.g., 2,3-dimethylbenzoic acid and 4-ethoxybenzoic acid).

Solid-State & Thermal Properties

- Physical State: White to off-white crystalline powder.[1]
- Melting Point (MP): 148–152 °C (Predicted).[1]
  - Note: Unsubstituted 2,3-dimethylbenzoic acid melts at ~145°C. The addition of the para-ethoxy group generally increases the lattice energy, slightly elevating the melting point range.[1]
- Boiling Point: ~330 °C at 760 mmHg (Predicted).[1]

Solution Properties & Lipophilicity[1]

- pKa (Acid Dissociation): 4.3 ± 0.2.[1]

© 2026 BenchChem. All rights reserved.

- Mechanistic Insight: The electron-donating ethoxy group at the para position exerts a resonance effect that slightly decreases acidity compared to unsubstituted benzoic acid (pKa 4.2).[1] However, the ortho-methyl group introduces steric inhibition of resonance (SIR) for the carboxylate, potentially twisting it out of plane, which can modulate this effect.[1]

- LogP (Octanol/Water Partition): 2.9 – 3.2.[1]
  - Relevance: This range indicates moderate lipophilicity, making the compound suitable for oral drug delivery scaffolds (Rule of 5 compliant) but requiring organic co-solvents (e.g., DMSO, Methanol) for high-concentration stock solutions.[1]

- Solubility:
  - Water: Low (< 0.5 mg/mL at pH 2); increases significantly at pH > 6.0 (formation of benzoate salt).[1]
  - Organic Solvents: Soluble in DMSO, Ethanol, Methanol, Dichloromethane, and Ethyl Acetate.[1]

Synthetic Pathways[1][3][4]

The synthesis of **4-Ethoxy-2,3-dimethylbenzoic acid** can be approached via two primary reliable pathways. The choice depends on the availability of starting materials: the phenolic precursor (Route A) or the aldehyde precursor (Route B).[1]

Route A: Williamson Ether Synthesis (Preferred)

This route utilizes 4-hydroxy-2,3-dimethylbenzoic acid as the starting material.[1] It is preferred for its cost-effectiveness and scalability.[1]

- Step 1: Esterification (Protection): Convert the acid to methyl 4-hydroxy-2,3-dimethylbenzoate to prevent side reactions.[1]

- Step 2: Alkylation: React the phenol with ethyl iodide (EtI) or ethyl bromide (EtBr) using a base like Potassium Carbonate (

) in DMF or Acetone.[1]

© 2026 BenchChem. All rights reserved.

- Step 3: Hydrolysis: Saponify the ester using LiOH or NaOH to yield the free acid.[1]

Route B: Oxidation of Aldehyde

This route is often used when the aldehyde intermediate (4-ethoxy-2,3-dimethylbenzaldehyde, CAS 883536-41-2) is commercially available.

- Reagents: Sodium Chlorite (

  ), Hydrogen Peroxide (

  ), or Potassium Permanganate (

).[1]

- Conditions: Pinnick oxidation conditions (

  ,

  , t-Butanol/Water) are recommended to avoid over-oxidation or chlorination byproducts.[1]

Synthetic Workflow Diagram

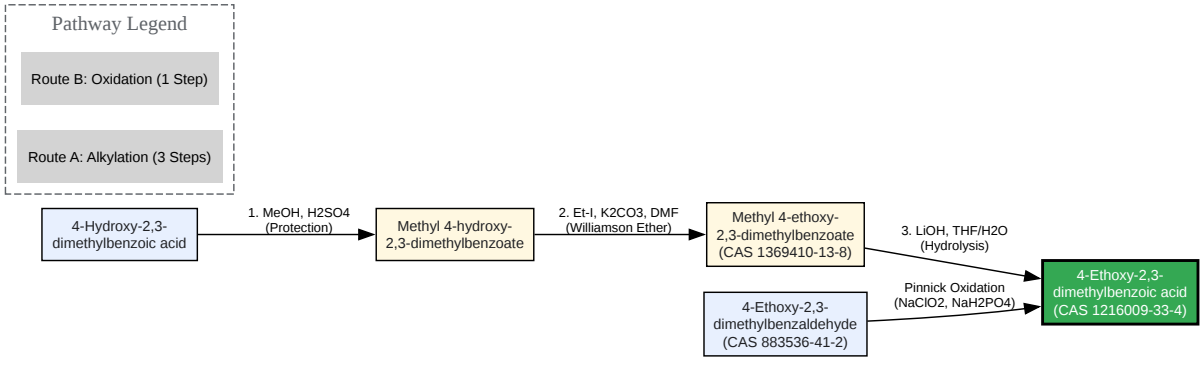

Click to download full resolution via product page

© 2026 BenchChem. All rights reserved.

Caption: Figure 1. Convergent synthetic pathways for **4-Ethoxy-2,3-dimethylbenzoic acid** via Alkylation (Route A) and Oxidation (Route B).

Analytical Characterization

To ensure scientific integrity, the identity of the synthesized compound must be validated using the following spectral signatures.

Proton NMR (-NMR)

Solvent: DMSO-d_6, 400 MHz

- 12.5-13.0 ppm (1H, broad s): Carboxylic acid proton (-COOH).[1]
- 7.6 ppm (1H, d, J=8.5 Hz): Aromatic proton at C6 (ortho to carboxyl).[1]
- 6.8 ppm (1H, d, J=8.5 Hz): Aromatic proton at C5 (ortho to ethoxy).[1]
- 4.1 ppm (2H, q, J=7.0 Hz): Methylene protons of the ethoxy group (-OCH_2CH_3).[1]
- 2.4 ppm (3H, s): Methyl group at C2 (ortho to carboxyl).[1]
- 2.1 ppm (3H, s): Methyl group at C3.[1]
- 1.3 ppm (3H, t, J=7.0 Hz): Terminal methyl of the ethoxy group (-OCH_2CH_3).[1]

Mass Spectrometry (LC-MS)

- Ionization Mode: Electrospray Ionization (ESI), Negative Mode preferred for carboxylic acids.[1]
- Observed Ion:

  at m/z 193.2.[1]
- Positive Mode:

  at m/z 195.2. Fragmentation often shows loss of the ethyl group (

) or loss of the ethoxy group.[1]

© 2026 BenchChem. All rights reserved.

Stability & Handling

Storage Protocols

- Temperature: Store at 2–8°C.
- Atmosphere: Hygroscopic potential is low, but storage under inert gas (Argon/Nitrogen) is recommended for long-term reference standards to prevent oxidative degradation of the ethoxy ether linkage.[1]
- Container: Amber glass vials to protect from light.

Degradation Pathways

The primary degradation risk is decarboxylation at very high temperatures (>200°C) or ether cleavage under strongly acidic conditions (e.g., concentrated HBr or HI).[1]

References

Need Custom Synthesis?

BenchChem offers custom synthesis for rare earth carbides and specific isotopiclabeling.

Email: info@benchchem.com or Request Quote Online.

Sources

- 1. 2,4-Dimethylbenzoic acid | C9H10O2 | CID 11897 - PubChem [pubchem.ncbi.nlm.nih.gov]
- 2. 3-ETHOXYBENZOIC ACID | 621-51-2 [chemicalbook.com]
- To cite this document: BenchChem. [Technical Guide: Physicochemical Properties & Synthesis of 4-Ethoxy-2,3-dimethylbenzoic Acid]. BenchChem, [2026]. [Online PDF]. Available at: [https://www.benchchem.com/product/b6357268/docs#technical-guide-physicochemical-properties-synthesis-of-4-ethoxy-2-3-dimethylbenzoic-acid]

Disclaimer & Data Validity:

© 2026 BenchChem. All rights reserved.

The information provided in this document is for Research Use Only (RUO) and is strictly not intended for diagnostic or therapeutic procedures. While BenchChem strives to provide accurate protocols, we make no warranties, express or implied, regarding the fitness of this product for every specific experimental setup.

Technical Support: The protocols provided are for reference purposes. Unsure if this reagent suits your experiment?

Need Industrial/Bulk Grade? Request Custom Synthesis Quote

BenchChem

Our mission is to be the trusted global source of essential and advanced chemicals, empowering scientists and researchers to drive progress in science and industry.

Contact

Address: 3281 E Guasti Rd

Ontario, CA 91761, United States

Phone: (601) 213-4426

Email: info@benchchem.com

Contact our Ph.D. Support Team for a compatibility check

© 2026 BenchChem. All rights reserved.